TRAKMASTER

EXPLORER PT

Travel Height: 2229 mm
Travel Height with aircon: 2390mm
Travel Width: 2005mm
Travel Length: 6350mm

Ball Weight: 175kg*
Tare: 2060kg*
ATM: 2850kg

Australian made steel
5 year chassis warranty
5 year suspension warranty

Designed and built in Australia by TRACK, the all-new Explorer PT proudly carries forward the **rugged reliability** that has made Trakmaster a leader in **serious off-road caravanning**.

Introducing a **smart pop-top design** integrated into the proven Explorer platform, the Explorer PT delivers the perfect balance of **capability and comfort**. Renowned for its **toughness**, **intelligent layout** and true **off-grid performance**, the Explorer foundation now reaches new heights—literally.

When storing the Explorer PT, a **total height of under 2100mm** is possible depending on options fitted.

With up to **1000W of roof-mounted solar**, **1500Ah of lithium battery capacity** and **3000W of inverter power**, the Explorer PT has the ability of going **all electric** so you can stay off-grid longer and travel further—without compromise.

Adventure, extended. Freedom, amplified.

TRAKMASTER

EXPLORER PT

STANDARD INCLUSIONS

Power

- 2 x 250Ah lithium batteries
- Redarc 2000W Pure Sine Wave inverter
- 3 x 200W rooftop solar panels
- Redarc Manager Alpha 50 with RedVision Display
- Dual-supply 240V power points (internal & external)
- Twin USB A/C charging points
- External solar input via Anderson plug

Water

- 150L front-mounted water tank
- 100L mid-mounted water tank
- 50L rear-mounted grey water tank
- High pressure pump with in-line grit filter and tempering valve on hot water lines
- External shower point with handheld shower rose
- Pressurised inlet for mains water supply
- Water pickup from external source
- Kitchen sink handpump fitted with high-quality water filter
- Tap on drawbar

External Premium Kitchen

- Stainless steel slide-out external kitchen featuring large preparation space, 3 x large drawers, glass sink top, flick mixer tap, easy to use windshield, 2 x dual-supply power points, under kitchen LED light, 3-burner gas cooktop with Piezo ignition, 2 x 4kg gas bottles
- Pull-out fridge drawer with 95L Evakool dual-zone fridge, tie downs and storage
- External pantry with shelving & LED lighting

Internal Colours

- Floor: Worn Oak
- Drawer fronts: Charcoal Matte
- Benchtop & table: Bardolino Oak

Internal Ensuite

- Full height shower rose
- Chemical-free cassette toilet
- SOG ventilation

Interior Refinements

- Queen-size pocket-spring mattress & under-mattress liner
- North / south bed orientation with bedside consoles
- Removable table
- Windows featuring combination blinds & sandfly proof screens
- Opening roof hatch with blackout blind and insect screen
- Internal sink (11L capacity) with flick mixer tap
- Coloured splashback & soap bottle holder
- Rangehood above internal bench
- Microwave under benchtop
- Manual central locking of internal drawers
- Diesel heater & hot water
- Leather-look shaped & bolstered seating with embroidered branding
- Laminate benches & overhead lockers Side-wall storage pocket
- 2 x 3-speed fan with timer
- Wall & vanity mirrors

Storage

- Aerodynamic front nose cone storage
- Slide-out drawbar drawer
- Tunnel shelf above kitchen
- LHS & RHS external side lockers
- Internal drawers
- Above bedhead storage

Outdoor Living

- Manual wind-out awning
- Sail awning

Suspension, Chassis, Body & Wheels

- Trakmaster Trak-Two independent trailing arm coil suspension with twin shocks
- 2850kg ATM
- Hot dipped galvanised chassis
- Bump stops to suit 33” diameter tyres
- 17 x 9 alloy wheels
- Off-road 12” electric brakes & handbrake
- Sway Control & Breakaway Controller
- Aluminium sandwich walls
- Full-height entry door with built-in sandfly-proof security screen
- LED tail lights & side clearance markers
- Underbody protection mudflaps
- Fixed rear bumper
- Removable stabiliser legs

Drawbar

- ARK dual wheel height adjustable jockey wheel
- Flat 7 pin trailer plug
- DO35 3.5 tonne fully articulated off-road coupling
- Aluminium checker plate step & spirit level
- Stone deflectors
- Underfloor spare wheel mount

Media & Lightning

- LED roof panels dimmable lighting
- Bedside reading LED lights with USB chargers
- External LED lights (white / yellow outputs)
- Front nose cone & external lockers LED lighting

All model specifications and pricing details are subject to change. All images are computer generated and final Explorer PT appearance may vary.

Dealer delivery fees may apply.

*Tare and Ball Weights are a guide only and may change depending on drawbar layout and options fitted.

by TRACK. “RVs THAT INSPIRE”

TRAKMASTER

EXPLORER PT

OPTIONS AVAILABLE

Power	RRP (inc GST)
750Ah (2 x 375Ah) lithium batteries	$7,996
1125Ah (3 x 375Ah) lithium batteries	$11,994
1500Ah (4 x 375Ah) lithium batteries	$15,992
Credit to be applied if selecting any of the 375Ah lithium battery options above by removing the 2 x 250Ah	-$5,796
Upgrade to Redarc 3000W Pure Sine Wave inverter	$3,099
Credit to be applied if selecting 3000W inverter	-$2,169
Upgrade to 800W (4 x 200W) rooftop solar panels by adding one additional solar panels	$800
Upgrade to 1000W (5x 200W) rooftop solar panels by adding two additional solar panels	$1,600
Redarc Manager Alpha75 with RedVision Display	$4,899
Redarc Manager Alpha 100 with RedVision Display	$5,899
Credit to be applied if selecting either of the larger Redarc Alpha models above by removing the Alpha50	-$3,999

External Premium Kitchen	RRP (inc GST)
Upgrade to 2-hob induction cooktop with built-in 1800W and 1500W hobs	$1,600
Additional plumbed gas line with quick snap connector (for use with compliant 'flame-failure' gas device)	$255

Interior Refinements	RRP (inc GST)
Roof-mounted reverse-cycle air conditioning, inverter compatible	$1,695
Change bed from N-S Queen to N-S singles (with center consoles)	$1,790
Change bed orientation from N-S to E-W (no bedside consoles)	NCO
Modular 2 x drawers with benchtop, magazine rack and power outlets (replaces a seat)	$1,050
2-hob induction cooktop set into internal benchtop	$775
Single hob portable induction cooktop	$275
85L upright fridge with condenser cooler kit	$1,700
All drawers (no microwave)	NCO
14ltr drawer fridge	$1,990
Front-wall storage barriers	$395
Under-seat mesh storage barriers	$190

Internal Ensuite	RRP (inc GST)
Additional toilet cartridge	$475
Composting toilet (pricing from)	$2,100

Outdoor Living	RRP (inc GST)
Awning Shade Wall	$269
Fully-enclosed awning with draft skirt	$3,550
Sail track on RHS	$249
Roller awning – Aussie Traveller (inc anti-flap kit and rafter plus upgrade to 110ltr fridge	$1,980

Suspension, Chassis, Body & Wheels	RRP (inc GST)
Customise suspension to best suit your tow vehicle specifications. Please be aware that not all offsets or PCDs can be matched and this is subject to our terms and conditions.	POA
Trailer safety control including ABS with wheel sensors, lane change control, sway mitigation, Bluetooth for diagnostics, odometer (Note: currently only available for drum brakes)	$1500
Air suspension including onboard air, manual levelling with paddles/gauges, remote controller	$5,900
Disc brakes (not compatible with DSC and ABS)	$2,400
Rear bumper accessories – 2 x jerry can holders	$245
Rear bumper accessories – 1 x jerry can holder, 1 x wood box	$400
Rear bumper accessories – 2 x wood boxes or 1 x large wood box	$450
Rear bumper accessories – additional spare wheel mount	$175
Front bike rack option (requires tipping to open front nose cone)	$1,475
Maxtrax mounting pins on rear wall (subject to rear bumper accessories fitted)	$150
Safety Dave HD dual-lens rear-mounted camera (terminated on drawbar with WOZA socket (Note: WOZA cable to tow vehicle not supplied)	$490

by TRACK.
"RVs THAT INSPIRE"

TRAKMASTER

EXPLORER PT

- A lower frontal profile slices through the air for improved aerodynamics, better fuel efficiency and rock-solid towing stability.
- Optional air suspension drops travel height by 80mm at the push of a button for smarter clearance and control. Depending on options fitted a storage height of less than 2100mm is possible.
- A massive 640mm lift powered by actuator-driven scissor mechanisms makes setup and pack-up fast, smooth and effortless.
- A tough sheet-metal front nose with integrated storage access adds durability and practicality up front.
- A folding full-height entry door with skirt break delivers true stand-up access wherever you pull up.
- Dial up your off-grid capability with options of up to 1000W of solar, up to 1500Ah of lithium power and up to 3000W of inverter output — giving you the ability of going all-electric that provides the freedom to stay out longer and go further.

BUILT SMARTER
TRAVEL FURTHER
STAY LONGER

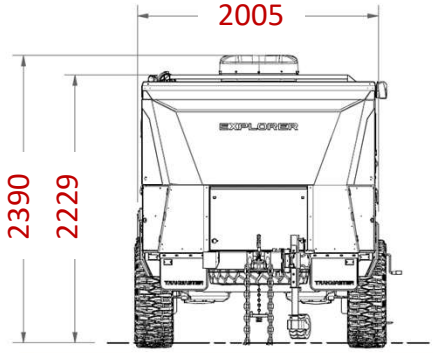

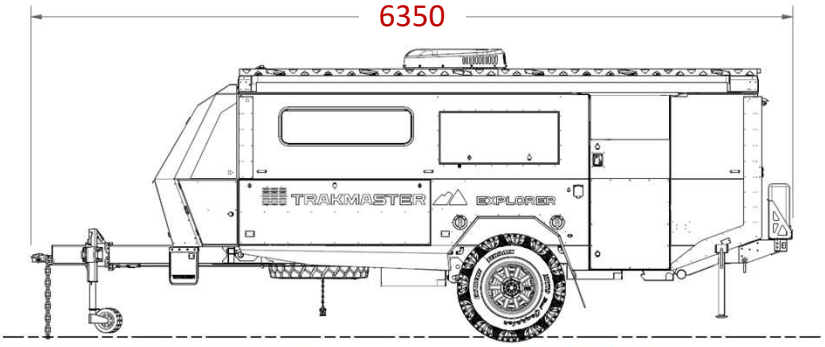

TRACK is proudly represented by your local dealer:

www.tracktrailer.com.au
sales@tracktrailer.com.au
Tel: 03 8727 6100

Caravan Industry Australia

ACCREDITED RVMAP™