SUNWOLF

solar manufacturers and wholesalers



# SOLAR STREET LIGHT DX SERIE

SUNWOLF SOLAR MANUFACTURERS AND WHOLESALERS

Lifestyle Mall, Corner Borrowdale and
Kingsmead Road, Borrowdale,
Harare, Zimbabwe

www.sunwolf.org

sales@sunwolf.org

+263 77 777 3565

# Product

NEW DESIGN GIVE YOU
**EXCELLENT** USER
EXPERIENCE

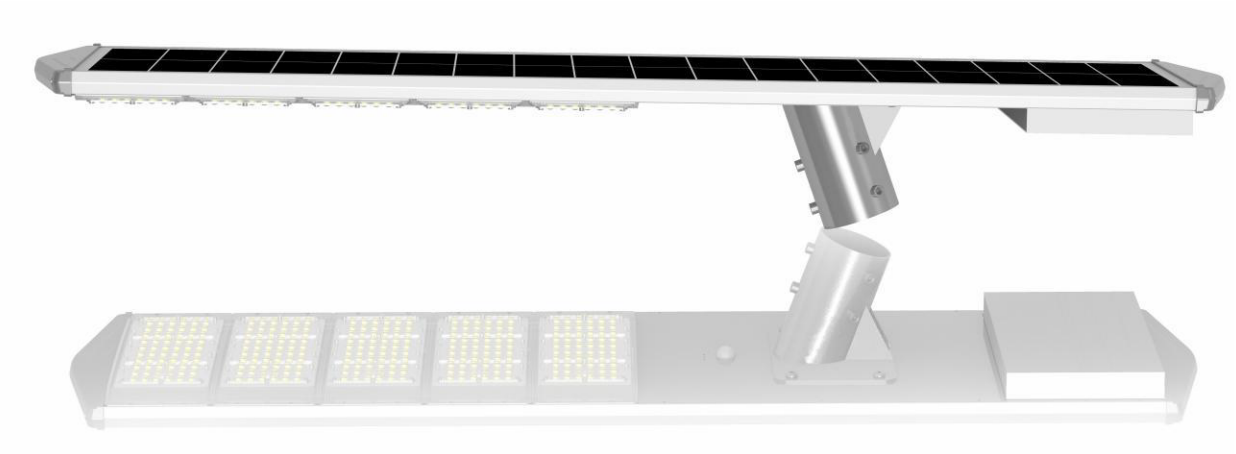



Lifestyle Mall, Corner Borrowdale and Kingsmead Road, Borrowdale,
Harare, Zimbabwe
www.sunwolf.org
sales@sunwolf.org
+263 77 777 3565

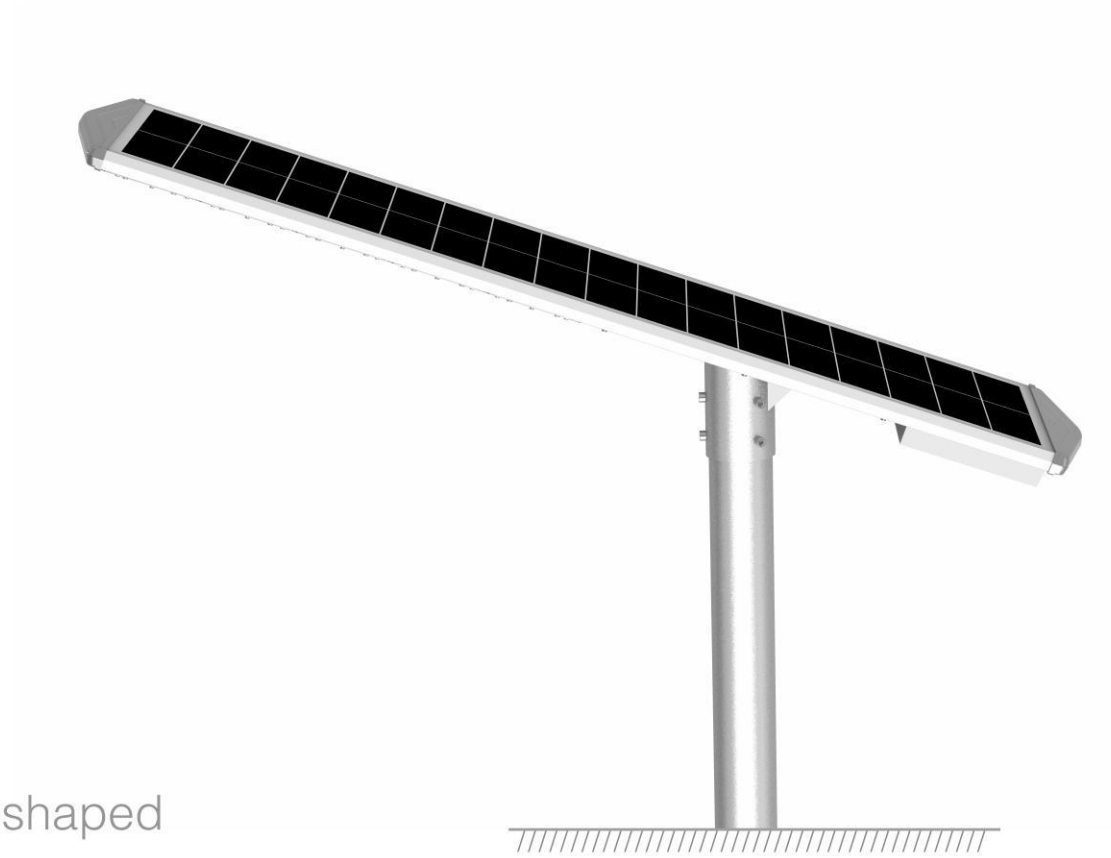

The arc-shaped
**ALUMINUM FRAME WITH GLOSSY WHITE OXIDATION**
treatment.





Lifestyle Mall, Corner Borrowdale and Kingsmead Road, Borrowdale,
Harare, Zimbabwe
www.sunwolf.org
sales@sunwolf.org
+263 77 777 3565



Incorporating modern
**AESTHETIC ELEMENTS,**
**ULTRA-THIN, ULTRA-LIGHT**
and ultra-performance,
which is full of luxury.





Lifestyle Mall, Corner Borrowdale and Kingsmead Road, Borrowdale,
Harare, Zimbabwe
www.sunwolf.org
sales@sunwolf.org
+263 77 777 3565

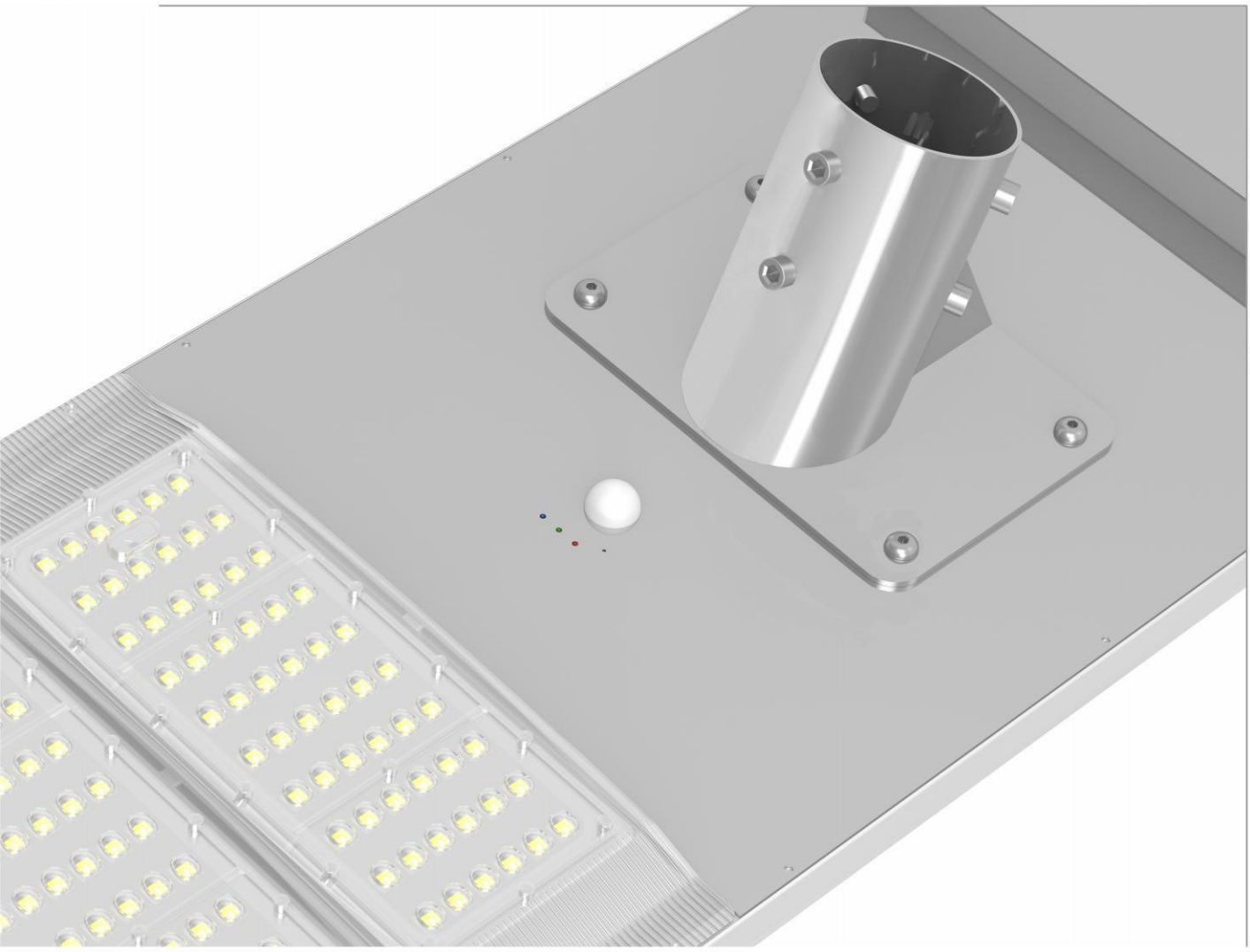

With the state-of-the-art LED driver,
two different LED colors can be coexisted
in the same lamp.
In same night, we can program different color
temperature at different time period.



Lifestyle Mall, Corner Borrowdale and Kingsmead Road, Borrowdale,
Harare, Zimbabwe
www.sunwolf.org
sales@sunwolf.org
+263 77 777 3565



**BRAND-NEW HIGH-TEMPERATURE**

resistant lithium-iron phosphate (LiFePO4) battery cells prolong service life of the lamp.



Lifestyle Mall, Corner Borrowdale and Kingsmead Road, Borrowdale, Harare, Zimbabwe
www.sunwolf.org
sales@sunwolf.org
+263 77 777 3565



## THE STREAMLINED DESIGN

of optical lens for 3030
& 5050 type LED
The Viewing Angle can reach 160*70°
for better light distribution.



Lifestyle Mall, Corner Borrowdale and Kingsmead Road, Borrowdale,
Harare, Zimbabwe
www.sunwolf.org
sales@sunwolf.org
+263 77 777 3565

# SPECIFICATIONS

| Model | | DX-40 | DX-60 | DX-80 | DX-100 |
|---|---|---|---|---|---|
| LED Lamp | Power | 40 watts | 60 watts | 80 watts | 100 watts |
| | Lumen | 4000Lm | 6000Lm | 8000Lm | 10000Lm |
| | Color Temp. | 6000-7000K White / 2700-3200K Amber | | | |
| | Type | 3030 (5050 optional) | | | |
| | QTY | 120pcs | 180pcs | 240pcs | 300pcs |
| | Viewing Angle | 155°×70° | | | |
| PV module | Mono Solar Panel | 73W18V | 87W18V | 109W18V | 127W18V |
| | Type | Monocrystalline | | | |
| | Auto Clean | Optional | | | |
| Lithium Battery | LiFePO4 battery | 12.8V 30AH | 12.8V 40AH | 12.8V 50AH | 12.8V 60AH |
| | Type | LiFePO4 lithium Iron Phosphate | | | |
| | Cell | 32700 3.2V 6Ah brand-new cell | | | |
| Performance | Charge Time | 8-10hours (with enough strong shine) | | | |
| | Discharge Time | 5-7 Consecutive Rainy Days | | | |
| | Work Mode | Motion Sensor / Time Control Mode settable via Remote | | | |
| Environmental | Ambient Temp. | -20 °C ~ +60 °C | | | |
| Reliability | Certificate | CE/ROHS/IP65 | | | |
| Installation | Height / Distance | 6-7m/25-30m | 7-8m/25-30m | 8-9m/25-30m | 9-10m/25-30m |
| Physical | Dimension | 740*371*56mm | 881*371*56mm | 1116*371*56mm | 1305*371*56mm |
| | Packaging | 790*110*420mm | 930*110*420mm | 1170*110*420mm | 1360*110*420mm |


Lifestyle Mall, Corner Borrowdale and Kingsmead Road, Borrowdale, Harare, Zimbabwe www.sunwolf.org sales@sunwolf.org +263 77 777 3565

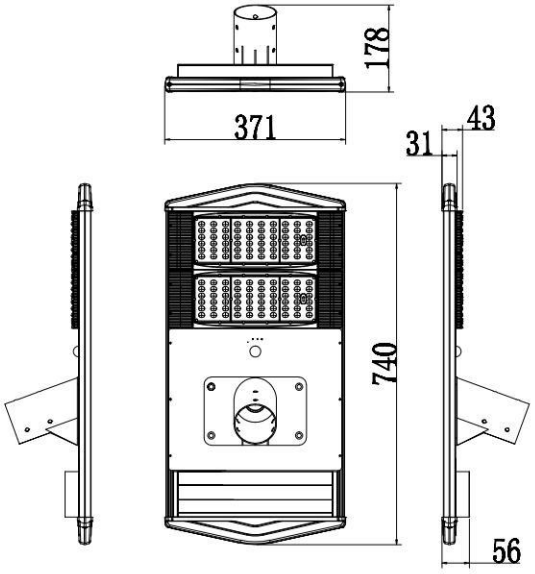


DX-40

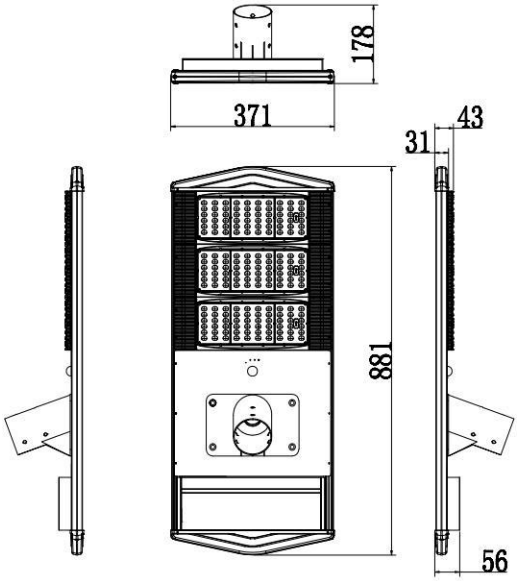


DX-60

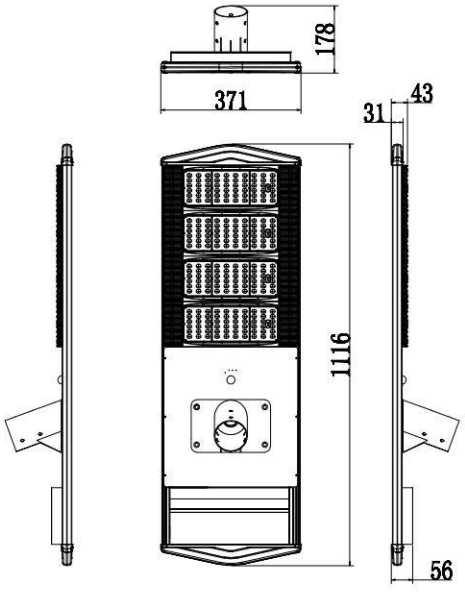


DX-80

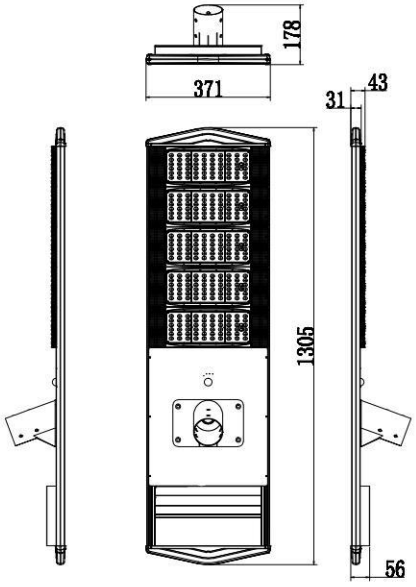


DX-100



Lifestyle Mall, Corner Borrowdale and Kingsmead Road, Borrowdale,
Harare, Zimbabwe
www.sunwolf.org
sales@sunwolf.org
+263 77 777 3565

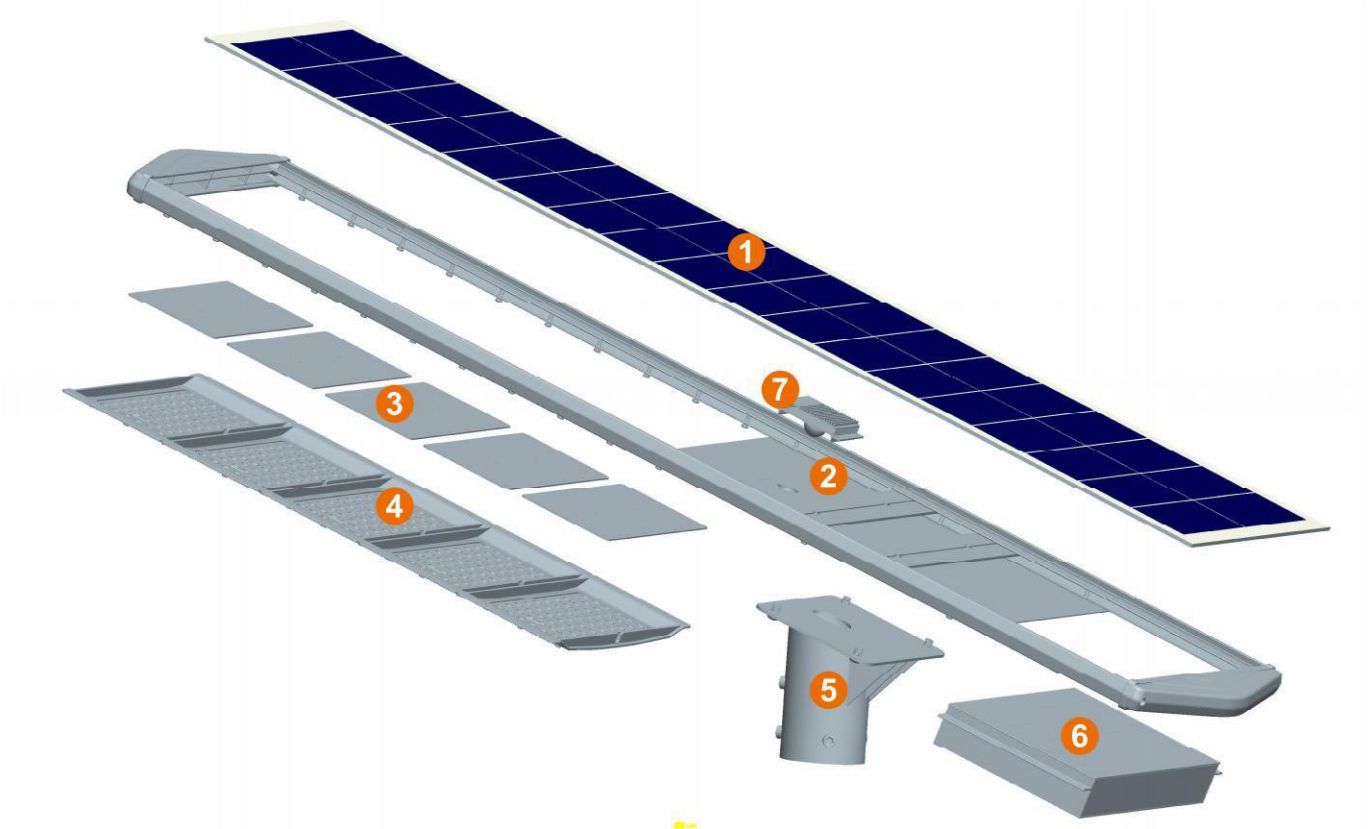


1 Mono PV Module | 2 Aluminum Lamp Casing | 3 LED Module | 4 Optical Lens

5 Support Base | 6 LiFePO4 Battery Pack | 7 MPPT Solar Controller



Lifestyle Mall, Corner Borrowdale and Kingsmead Road, Borrowdale,
Harare, Zimbabwe
www.sunwolf.org
sales@sunwolf.org
+263 77 777 3565



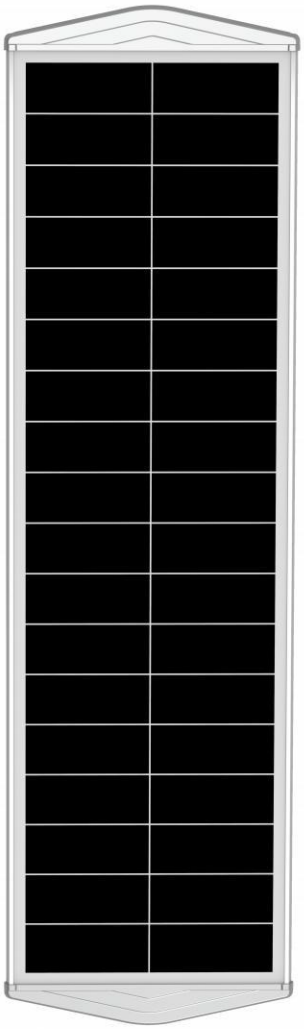



Lifestyle Mall, Corner Borrowdale and Kingsmead Road, Borrowdale,
Harare, Zimbabwe
www.sunwolf.org
sales@sunwolf.org
+263 77 777 3565





Lifestyle Mall, Corner Borrowdale and Kingsmead Road, Borrowdale,
Harare, Zimbabwe
www.sunwolf.org
sales@sunwolf.org
+263 77 777 3565