User Manual

Single-phase LV Hybrid Inverter

LIB RHR01L1P05~12-AU

EnergyLIB (Suzhou) New Energy Technology Co., Ltd.

Catalogue

1.Overview 3
1.1 Scope of Application 3
1.2 Applicable Personnel 3
1.3 Symbol Definition 4
2. Safety Precautions 5
2.1 Operational Safety & Personnel Qualification 5
2.2 Photovoltaic (PV) String Safety 6
2.3 Battery Safety 6
2.4 Inverter Safety 7
2.5 Description of Symbols 7
3.Equipment Inspection and Storage 8
3.1 Pre-Delivery Inspection 8
3.2 Packing List 9
3.3 Equipment Storage 12
4.Product Description 13
4.1 Product Overview 13
4.2 Application Scenarios & Important Limitations 13
4.3 Physical Description 14
4.3.1 Appearance and Interface Description 14
4.3.2 Size Description 16
5 Installation 17
5.1 Installation Requirements 17
5.1.1 Installation Environment Requirements 17
5.1.2 Mounting Carrier Requirements 18
5.1.3 Mounting Angle & Clearance Requirements 18
5.2 Mounting Tools 20
5.3 Inverter Transportation 22
5.4 Wall Mounted 23
6. Electrical Connection 24

6.1 Electrical System Connection Diagram 24
6.2 Port Definitions and Cable Specifications 26
6.3 Protection Grounding (PE) Connection 28
6.4 PV Array Connection 29
6.5 Battery Connection 32
6.6 AC Load/Grid/Generator Cable Connection 34
6.7 Installation of Communication Dongle 35
6.8 Communication Port Connections 38
6.8.1 Smart Meter Connection 40
6.8.2 BMS Communication Connection 42
6.8.3 DRMS/DI Connection 43
6.8.4 Parallel System Configuration 44
7 Inverter Operation 47
7.1 Pre-power-on Inspection 47
7.2 Startup Procedure 47
7.3 Shutdown Procedure 48
7.4 Working Mode 48
7.4.1 Self-use Mode (default mode) 48
7.4.2 Timed Charge/Discharge Mode 50
7.4.3 Backup Mode/Disaster Recovery Mode 52
7.4.4 Priority Feed to Grid Mode 52
7.5 Operation Status and Indicators 53
7.5.1 Inverter Operation Mode Description 53
7.5.2 LED Indicator Description 53
8 App Introduction & Configuration 55
8.1 APP Download 55
8.2 App Interface and Access Levels 56
8.3 Inverter Commissioning via App 57
8.3.1 Country Grid Code/Region settings 57
8.3.2 Power Quality Response Modes Settings 57

8.3.3 Grid Protection Settings 58
8.3.4 Inverter Firmware Version 59
8.4 Generation Limit and Export Limit Control settings 60
8.6 Insulation Fault 66
9. Troubleshooting and Maintenance 67
9.1 Alarm Diagnosis and Processing 67
9.2 Regular maintenance 71
10. Technical Parameters 73

1.Overview

This document describes the product information, installation, electrical connection, configuration and commissioning, troubleshooting and maintenance, and technical specifications of the Single-phase hybrid inverter. Before installing and using the product, read this manual carefully to familiarize yourself with the safety information and functions and features of the product. Manuals may be updated from time to time, please obtain the latest version from the official website for more product information.

1.1 Scope of Application

This manual applies to the following LIB hybrid inverter models:

Model	Rate output power	Rated output voltage
LIB RHR01L1P05-AU	5000W	L/N/PE, 220V/230V/240V
LIB RHR01L1P06-AU	6000W	
LIB RHR01L1P08-AU	8000W	
LIB RHR01L1P9.9-AU	9900W	
LIB RHR01L1P10-AU	10000W	
LIB RHR01L1P12-AU	12000W	

Note: To follow Australian Grid Specification certification, high-temperature mode testing is conducted at an ambient temperature of 40°C, as the product includes overload protection above this temperature.

1.2 Applicable Personnel

This document is intended exclusively for qualified personnel with:

Knowledge of local electrical regulations and standards.

Professional training and experience in installing and keeping electrical power systems.

Specific understanding of this product and its associated risks.

1.3 Symbol Definition

The following symbols are used throughout this manual to highlight critical safety information. Understanding and following these warnings is essential to prevent personal injury and equipment damage.

⚠ Danger
Indicates a highly hazardous situation which, if not avoided, will result in death or severe injury.
⚠ Warning
Indicates a hazard with a medium level of risk that could result in death or severe injury if not avoided.
⚠ Caution
Indicates a hazard with a low level of potential that, if not avoided, could result in moderate or minor injury.
⚠ Attenion
Indicates a potentially hazardous situation that, if not avoided, may cause equipment failure or property damage.

2. Safety Precautions

The safety precautions contained in this document **must** be strictly followed when using the device. Non-compliance may result in severe injury, **death**, or **significant property damage**.

⚠ Attenion
➢ This inverter has been designed and evaluated in strict accordance with safety regulations. However, as a high-power electrical device, it poses inherent risks. **You must read, understand, and follow all safety instructions in this manual before performing any operation.** Improper operation can lead to severe consequences.

2.1 Operational Safety & Personnel Qualification

During operation, internal components are live and hot. Transportation, installation, commissioning, and maintenance **must be performed exclusively by qualified electrical personnel** familiar with local regulations and this product.

⚠ Attenion
➢ **Read and Understand:** Thoroughly read this entire manual before installation and operation.

- **Qualified Personnel Only:** All installation, commissioning, and maintenance must be performed by **qualified electrical technicians**.
- **Use Proper Equipment:** Always use insulated tools and wear proper Personal **Protective Equipment (PPE)**.
- **Prevent Electrostatic Discharge (ESD):** When managing electronic components, wear ESD gloves, a wrist strap, and an ESD suit.
- **Compliance is Mandatory:** The manufacturer is not liable for any damage or injury resulting from failure to strictly follow the instructions in this manual.

2.2 Photovoltaic (PV) String Safety

Danger

- **Use only the DC wiring terminals delivered with the inverter.** Using other types of terminals can cause fire, explosion, or severe equipment damage. The manufacturer is not responsible for damage resulting from the use of incorrect terminals.

Warning

- **Secure Grounding:** Ensure the PV assembly frame is properly grounded to the support system. After connecting DC cables, ensure that the cables are securely connected.
- **Check Connections:** After wiring, ensure all DC cable connections are secure.
- **Verify Polarity and Voltage:** Use a multimeter to confirm correct polarity (positive/negative) and that the voltage is within the inverter's allowable range.
- **Do Not Share Strings: Never** connect the same PV string to multiple inverters, as this will damage the equipment.

2.3 Battery Safety

Warning

- Before installation, carefully read the battery user manual and strictly follow its instructions.
- **Environmental Impact:** Battery performance can be limited by external factors like temperature and humidity, affecting its on-load capability.
- **Immediate Action Required:** If the battery does not start, **contact the after-sales service center at once** to avoid permanent damage.

- **Verify Connection:** Use a multimeter to check that the battery polarity is correct and the voltage is within the specified range.
- **Do Not Share Battery Strings: Never** connect the same battery string to multiple inverters.

2.4 Inverter Safety

Warning

- **Grid Compliance:** The voltage and frequency at the grid-connection point must follow the inverter's specifications.
- **Overcurrent Protection:** A protection device (e.g., circuit breaker or fuse) must be installed on the AC side, rated at least **1.25 times** the inverter's largest AC output current.
- **Secure Grounding (PE):** The grounding cable must be securely connected. In multi-inverter systems, ensure all chassis ground points are equipotential connected.
- **Off-Grid Function Warning:** The inverter can operate in grid-tied mode without a battery. However, the off-grid (backup) function will not be available if a battery is not installed and configured. (The inverter works normally in grid-tied mode without a battery).

2.5 Description of Symbols

Safety symbols are found on the inverter chassis. Understand their meanings before installation.

Symbol	Symbol name	Symbol meaning

	Meaning: Danger of Residual Voltage	**Instruction:** After disconnecting DC power, wait at least **5 minutes** for capacitors to fully discharge before touching any internal components.
	Meaning: Danger of High Voltage	**Instruction:** High voltage is present during operation. Ensure the inverter is fully disconnected from all power sources (AC and DC) before servicing.
	Meaning: Hot Surface	**Instruction:** The inverter housing reaches elevated temperatures during operation. Do not touch to avoid burns.
	Meaning: Grounding Terminal	**Instruction:** This terminal must be connected to a proper earth ground for safety protection.
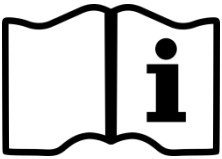	**Meaning:** Read Manual	**Instruction:** Read and understand this manual thoroughly before installation or operation.

3.Equipment Inspection and Storage

3.1 Pre-Delivery Inspection

- **Package Integrity:** Inspect the outer packaging for any signs of damage, including

holes, dents, crashes, or tears that may have affected the equipment inside.

- **Product Model:** Verify that the inverter model on the packaging matches your order.
- **Contents Verification:** Check that the number of delivered packages is correct and that their exteriors are undamaged.

3.2 Packing List

After unpacking the inverter, carefully inspect all contents against this list. If any items are missing or damaged, contact your dealer promptly.

Table 3-1 Components and mechanical parts to be delivered.

No.	photos	descriptions	quantity
1	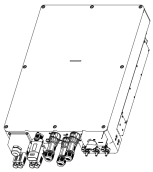	Inverter	1 PCS
2		WIFI dongle (optional)	1 PCS
3		User Manual (Digital)	1 PCS
4		Certificate & Quality Assurance Card	1 PCS
5		Delivery inspection report	1 PCS
6	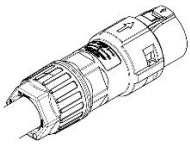	AC Terminal Set (Load/Grid/Generator)	3 PCS

7		Blue 16.0 mm² Cable Lugs For AC side wiring	9 PCS
8		BAT input terminal protective cover	2 PCS
9		PV+ wire end input terminal plastic case	3 PCS
10		PV- wire end input terminal plastic case	3 PCS
11		PV-wire end input terminal metal core	3 PCS
12		PV+ wire end input terminal metal core	3 PCS
13	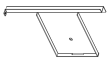	Wall-mounted rear cover	1 PCS
14	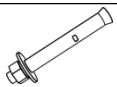	M8*80 expansion bolt	3 PCS

15		Waterproof cover	1 PCS
16	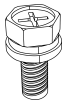	Cross recessed hexagon head combination screw M6*12	1 PCS
17	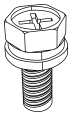	Cross recessed hexagon head combination screw M6*10	2 PCS
18	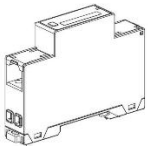	Smart meter	1PC
19		CT (used with the meter)	1PCS
20		Meter communication line	1 PCS
21		BMS communication line	2 PCS

22		PV Disassembly wrench	1 PCS
23		Desiccant	1 PCS

3.3 Equipment Storage

If the inverter is not installed at once, it must be stored according to the following conditions to prevent damage: Ensure that the outer packing case is not removed and the desiccant is not lost.

- **Keep Original Packaging:** Do not remove the inverter from its original protective packaging. Ensure the desiccant bag stays inside.
- **Environment:** Store in a **clean, dry, and well-ventilated** environment. Maintain ambient temperature and humidity within the specified operating ranges (see Chapter 10 for details).
- **Stacking Orientation:** If stacking multiple units, follow the orientation and maximum stacking height indicators on the packaging.
- **Stability:** Ensure stacked units are stable with no risk of tipping or falling.
- **Pre-Use Check:** After extended storage, inspect the inverter and perform a pre-power-on check (see Section 7.1) before commissioning.

4.Product Description

4.1 Product Overview

The LIB single-phase hybrid inverter is an integrated power conversion solution that combines photovoltaic grid-tie functionality with battery energy storage. It is engineered to meet diverse energy needs through its variety of built-in operating modes.

In an era of rising conventional energy costs and declining subsidies for grid-tied PV systems, this inverter provides a complete and reliable energy solution. It is ideally suited for applications requiring uninterrupted and emergency power supply, such as in remote mountainous areas or off-grid base stations.

4.2 Application Scenarios & Important Limitations

Warning

- **Critical Load Restrictions:** This photovoltaic system is **not suitable** for powering life-sustaining medical devices or any equipment that requires a guaranteed stable power supply. Ensure system power-off does not lead to personal injury.
- **High Inrush Current Loads:** Do not connect loads with a high starting current (e.g., large motors). The excessive instantaneous power demand may cause the off-grid output to fail.
- **Off-Grid Overload:** If the load exceeds the inverter's rated power during a grid outage, the off-grid function will shut down automatically. Restart by turning off large loads to ensure the total load power is less than the inverter's rated capacity.

OPERATIONAL NOTES:

- **Off-Grid Performance:** In off-grid mode, the inverter reliably powers standard household loads.
- **Inductive Loads:** Supports 1.5HP non-inverter air conditioners. Operation may become unstable if two or more such units are connected simultaneously.
- **Capacitive Loads:** The total power of capacitive loads must be ≤ 0.7 x the inverter's rated output power.
- **Overload Protection:** A single overload event will trigger an automatic restart. Repeated occurrences will cause the inverter to stop and require a manual restart via the App after the fault is resolved.

4.3 Physical Description

4.3.1 Appearance and Interface Description

The following figure and table provide a detailed overview of the inverter's external interfaces and components.

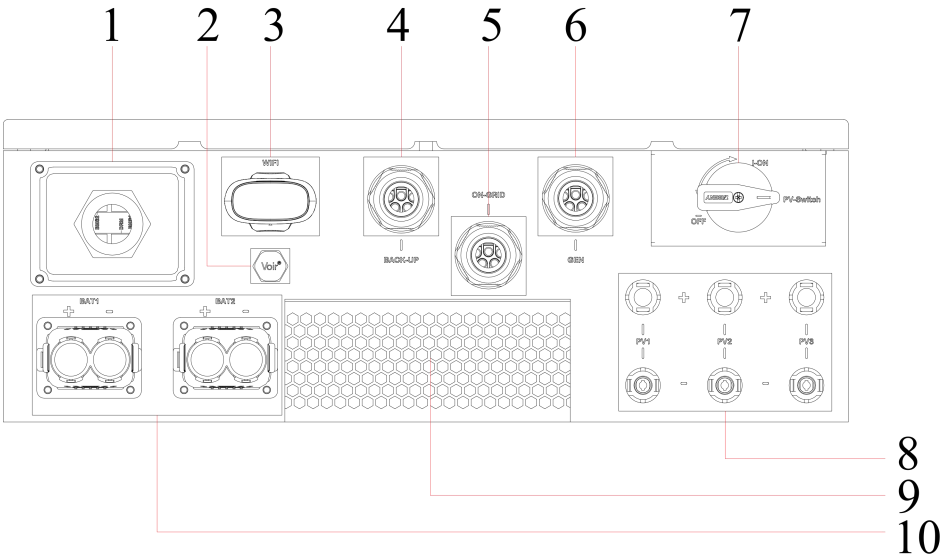

Figure 4.1 Illustration of the appearance of the inverter

Table 4-1 Appearance of the inverter

1	Communication module interface	2	Waterproof and breathable device
3	WiFi/4G interface	4	Off-grid AC wiring port
5	Grid-connected AC wiring port	6	Generator-connected AC wiring port
7	PV DC input switch	8	PV DC input port (PV+/-)
9	Fan assembly	10	Battery DC input port (BAT+/-)

4.3.2 Size Description

Figure 4.2 Overall size of inverter

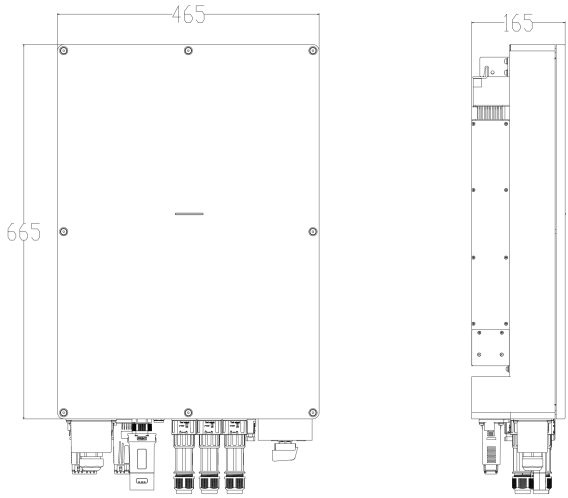

Figure 4.3 Dimensions of wall mount

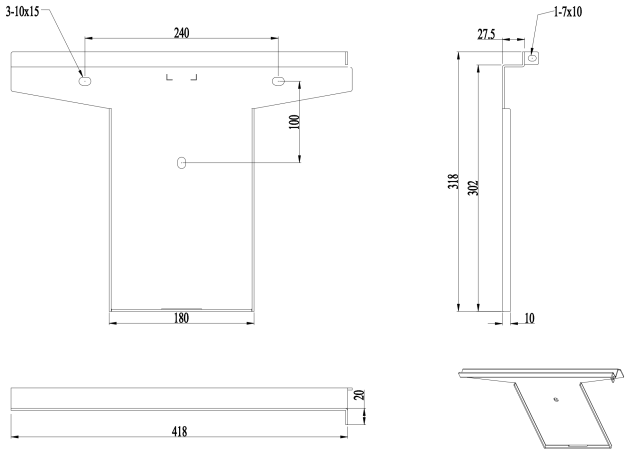

5 Installation

5.1 Installation Requirements

5.1.1 Installation Environment Requirements

Select an installation site that meets the following criteria to ensure safe, efficient, and reliable operation.

A. Safety & Location

Hazardous Environments: Never install in flammable, explosive, corrosive, or otherwise hazardous environments.

Wall Integrity: When drilling, choose a location away from hidden water pipes and electrical cables within the wall.

Accessibility: Install out of reach of children. Avoid locations where the unit may be easily touched, as the surface becomes hot during operation.

B. Environmental Protection

Weather Exposure: Protect the inverter from direct sunlight, rain, snow, and moisture. A sheltered location is strongly recommended; if necessary, construct a protective awning.

Ambient Conditions: The installation site must be well-ventilated with sufficient space for heat dissipation and maintenance access. Temperature and humidity must remain within the specified operating ranges.

Altitude: The installation altitude must not exceed the maximum operating altitude of **4000 meters**.

C. Operational Considerations

Visibility: Ensure the indicator lights and labels are clearly visible, and terminals are easily accessible for operation and maintenance.

Electromagnetic Interference (EMI): Keep the inverter away from strong magnetic fields. If a radio station or wireless communication device below 30MHz is within 30 meters, mitigation is needed:

Add a ferrite core with multi-turn winding to the DC input or AC output lines, OR

Install a low-pass EMI filter.

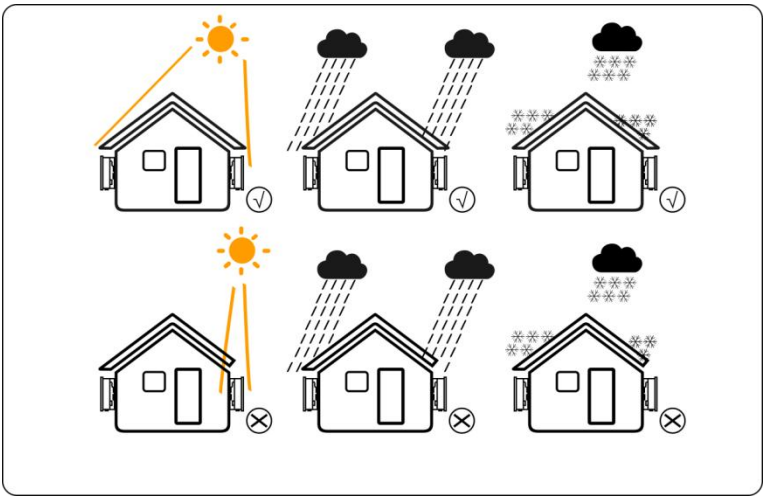

5.1.2 Mounting Carrier Requirements

The surface carrying the inverter must meet these criteria:

Material: The mounting surface must be made of non-flammable, fire-resistant material.

Strength: It must be solid, dependable, and capable of supporting the inverter's weight.

Noise Consideration: As the inverter produces noise during operation, avoid mounting it on surfaces with poor sound insulation in living areas to prevent disturbance.

5.1.3 Mounting Angle & Clearance Requirements

Angle: The inverter must be installed vertically or tilted backward by no more than **15°**. Do not invert, tilt forward, or install horizontally.

Clearance: Keep a clearance of at least **1.2 meters** above ground and **300 mm** of free space around the unit for proper airflow and access.

LIB RHR01L1P05~12-AU

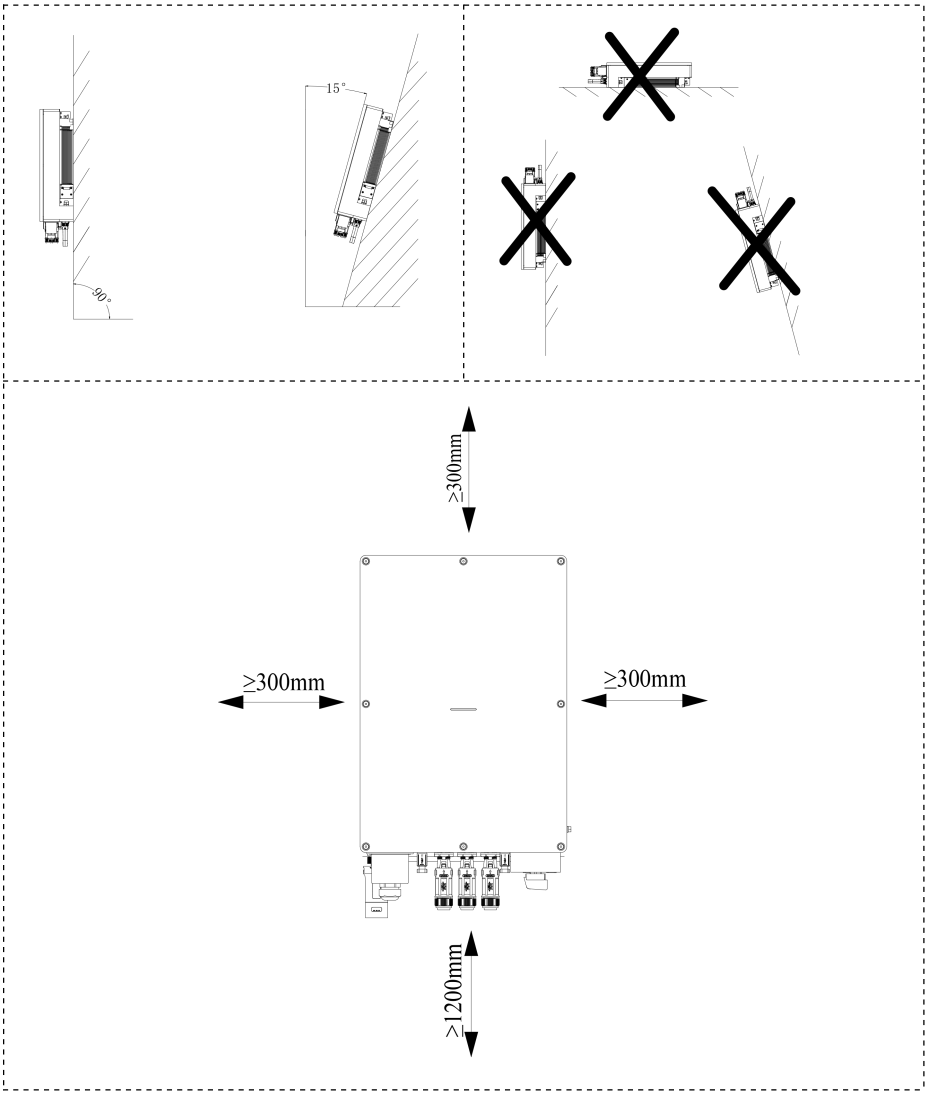

5.2 Mounting Tools

Prepare the following tools before beginning the installation. Using the correct tools is essential for safe and proper installation.

Table 5-1 List of installation tools

Series No.	Tools	Description	Function
1		Percussion drill Recommended 10mm drill	Wall drilling
2	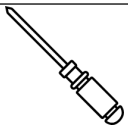	6mm crosshead screwdriver	Removing, installing screws and wiring
3		4mm crosshead screwdriver	Removing and installing load terminal screws
4	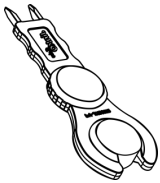	Removal tool	Removal of PV line end terminals
5		Wire strippers	Stripping wire
6	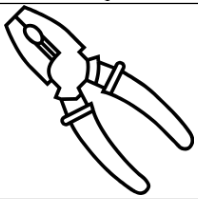	Crimping pliers	Crimping PV and BAT cables

7	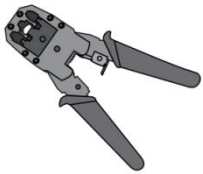	Crimping pliers	Pressure welding grid, load end cable
8		6mm hex wrench	Fasten the grid terminal to the cable
9		Multimeter	Check whether the cable wiring is correct, the positive and negative battery terminals are correct and voltage, and grounding is dependable
10		Marking pen	Drilling mark
11		Tape	Measurement distance
12	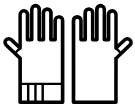	Protective gloves	Wear when setting up the inverter
13		Goggles	Wear when drilling holes
14		Dust mask	Wear when drilling holes

5.3 Inverter Transportation

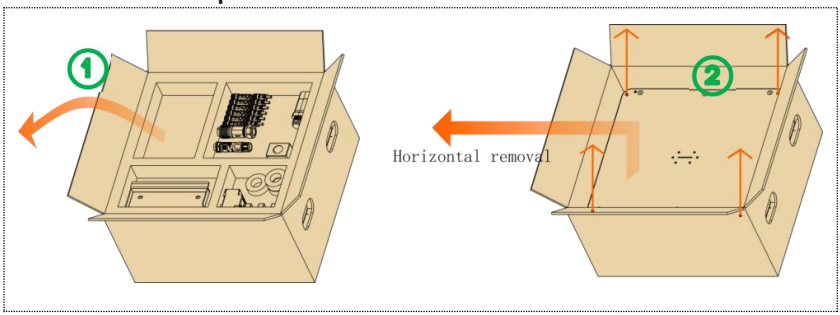

The inverter is heavy. Follow these instructions carefully during transportation and handling to prevent injury and equipment damage. All handling must follow local laws and regulations.

Caution

- **Lifting:** Use proper lifting techniques and keep the unit balanced to prevent it from falling.
- **Orientation:** Always transport and place the inverter **horizontally**. Do not tilt or invert it.
- **Protect Ports:** The cable ports on the bottom of the inverter must not bear any weight. Avoid direct contact with wiring terminals.
- **Surface Protection:** When placing the inverter on the ground, use foam or cardboard underneath to prevent damage to the casing.
- **Drilling Safety:** When drilling mounting holes, wear safety goggles, and a dust mask to protect against debris. Ensure you are drilling away from hidden pipes and cables.

5.4 Wall Mounted

Attenion

- When drilling holes, ensure that the holes are drilled away from water pipes and cables in the wall to avoid dangers.
- When drilling holes, wear goggles, and a dust mask to prevent dust from inhaling into the respiratory tract or falling into the eyes.

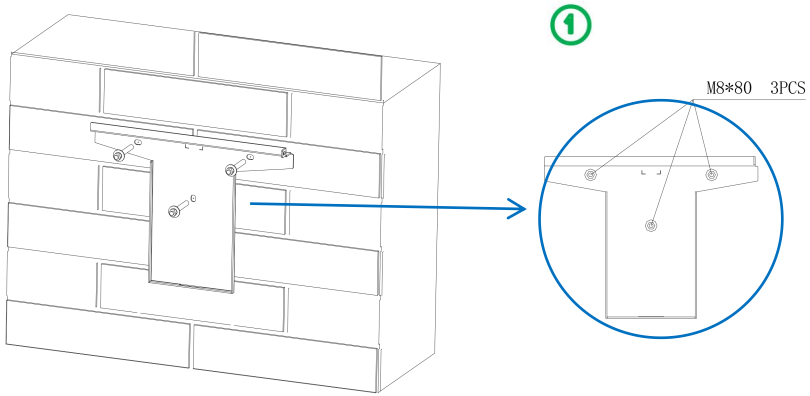

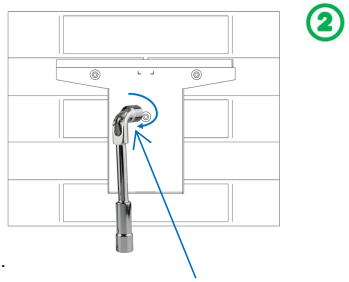

13mm

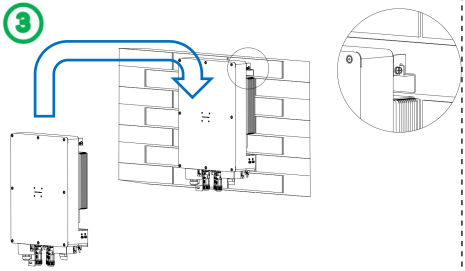

Fix the screw torque at 5N.m

6. Electrical Connection

This chapter provides comprehensive instructions for the safe and correct electrical installation of your LIB hybrid inverter. All electrical work must be performed by a qualified electrician in accordance with local wiring rules and regulations. Failure to follow these instructions can result in severe injury, equipment damage, or fire.

Danger

- **Power Off Before Working:** Before commencing any installation or maintenance, ensure the inverter is completely disconnected from all power sources, including AC grid, AC load, generator, PV arrays, and batteries.
- **Capacitor Discharge:** Internal capacitors retain a dangerous charge after power-off. Wait at least **5 minutes** to ensure they are fully discharged before touching any terminals.
- **Qualified Person Only:** All electrical work **must be performed by qualified personnel**. Incorrect connections can cause severe equipment damage, fire, or electric shock.

6.1 Electrical System Connection Diagram

This section provides the standard electrical diagram for the hybrid inverter energy storage system.

Attenion

- **Neutral (N) and Earth (PE) Wiring:** The connection of N and PE wires must comply with local regulations (AS/NZS 3000 in Australia).
- **Back-up Port Hazard:** The BACK-UP port may be live during operation. To avoid electric shock, power down the inverter before working on backup load wiring.
- **Internal Relays:** The inverter manages grid connection via internal relays. The ON-GRID relay is open in off-grid mode and closed in on-grid mode.

Recommended External Protection Device Parameters:

- **Battery Side DC Breaker:** Rated voltage ≥ 100V, Rated current ≥ 150A.
- **Grid Side AC Breaker:** Rated voltage ≥ AC 230/400V, Rated current ≥ 125A,

- **Load Side AC Breaker:** Rated voltage ≥ AC 230/400V, Rated current ≥ 80A,
- **Generator Side AC Breaker:** Rated voltage ≥ AC 230/400V, Rated current ≥ 125A,

RCD Compatibility and Requirements

- **RCD Type**: Use Type A or Type B RCDs, as appropriate to ensure protection against pulsating DC residual current.RCD selection and installation shall comply with AS/NZS 3000.RCDs shall be certified to the applicable product standard(s): AS/NZS 3190, AS/NZS 61008.1, AS/NZS 61009.1 or IEC 62423, as appropriate.
- **Rated Parameters**:

  Grid/Generator Port: Minimum 30mA leakage current, 125A rated current.

  Load Port: Minimum 30mA leakage current, 80A rated current.
- **Installation Location**: Install RCDs at the grid connection point and load side as shown in Figure 6.1.

Figure 6.1 Electrical connection diagram

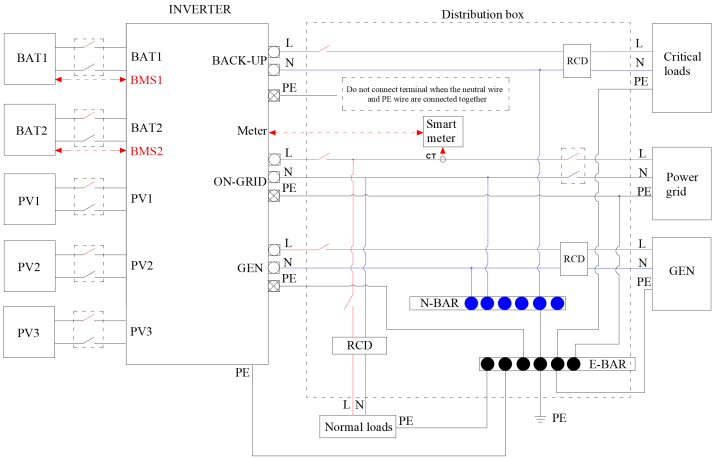

Neutral Continuity Requirement

- For multi-inverter parallel systems or hybrid configurations, the neutral line (N) must be continuously connected and not switched by any internal relay. This ensures compliance with AS/NZS 3000 standards.

- In the electrical diagram (Figure 6.1), the neutral line from the grid, load, and generator ports should be directly interconnected without interruption. If using external switches or breakers, ensure they do not disconnect the neutral line.
- Verification: After installation, use a multimeter to confirm neutral continuity between all AC ports.

6.2 Port Definitions and Cable Specifications

Use the following table to select the correct cables for safe and reliable operation.

Table 6-1 Cable Model and Specification Descriptions

Port	Definition	Cable type	Cable specification
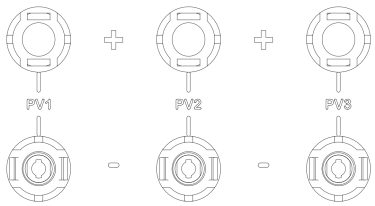	**PV+ / PV-:** Photovoltaic Input	Outdoor Multi-Core Copper Cable	Recommended cross-section: 6mm², Maximum current: 30A
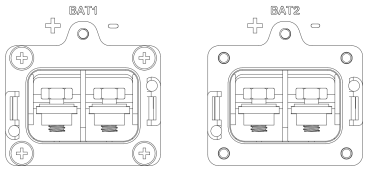	**BAT+ /BAT-:** Battery Input	Outdoor Multi-Core Copper Cable	Recommended cross-section: 35mm², Max current: 150A

LIB RHR01L1P05~12-AU

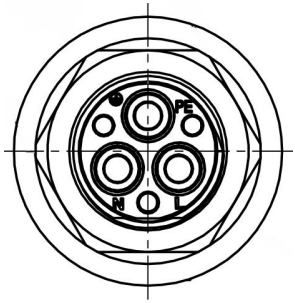	**AC Load Port:** L, N, PE	Outdoor Multi-Core Copper Cable	Recommended: 8 AWG, Maximum current: 60A (PE conductor same size as phase conductors)
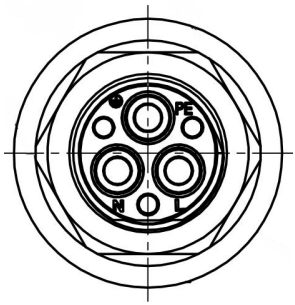	**AC Grid Port:** L, N, PE	Outdoor Multi-Core Copper Cable	Recommended: 6 AWG, Maximum current: 82A (PE conductor same size as phase conductors)
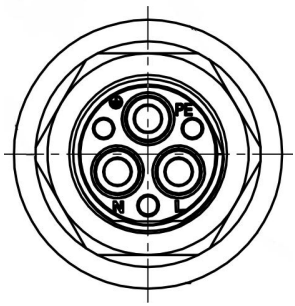	**AC Generator Port:** L, N, PE	Outdoor Multi-Core Copper Cable	Recommended: 6 AWG, Maximum current: 82A (PE conductor same size as phase conductors)

6.3 Protection Grounding (PE) Connection

Proper grounding is critical for safety and system performance.

Attenion

- **Transformer-less Design:** Although the battery circuit uses an isolation topology, there is no transformer between the PV and the grid. **So The PV array's positive and negative poles must NOT be grounded**, otherwise the inverter will be damaged.
- **Equipment Grounding:** All non-current-carrying metal parts (e.g., PV brackets, distribution cabinet enclosures, inverter chassis) **must be connected to eliable earth ground.**

Figure 6.2 Schematic diagram of protection grounding

Procedure:

1、Strip insulation from yellow-green grounding cables to appropriate length.

2、Insert exposed conductor into the supplied OT terminal ferrule.

3、Crimp the connection securely using a certified tool.

4、Connect the grounding terminal to the designated earth point.

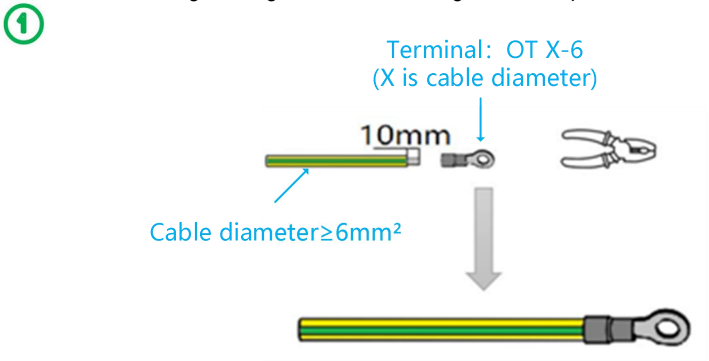

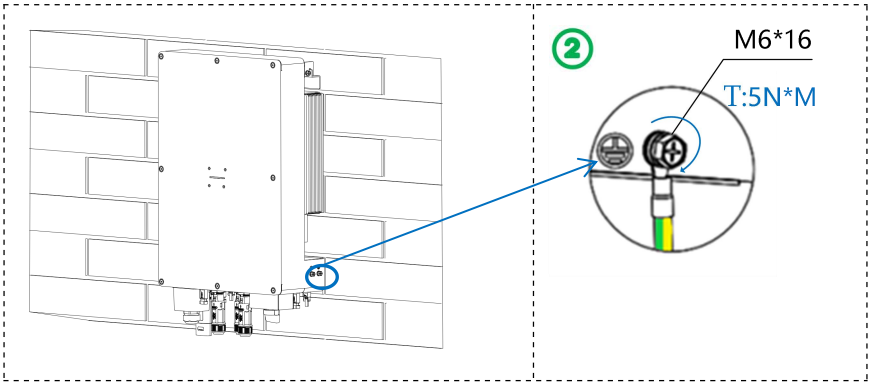

6.4 PV Array Connection

Warning

PV String Connection Guidelines:

- **No Grounding:** PV string output must be floating (ungrounded)
- **Check Insulation:** Verify PV string's insulation resistance meets requirements
- **Verify Polarity:** Connect PV+ to inverter PV+, PV- to inverter PV-
- **Check Voltage/Current:** Ensure values are within inverter's specified range

Notes:

1. PV modules must meet IEC 61730 Class A standard.
2. An external DC circuit breaker (max current ≥ 30A) is required for each PV string.

Figure 6.3 Connecting PV cables.

Connection Steps:

1. Ensure the PV DC switch is OFF，Remove the connector rear cover.
2. Route the stripped DC cable through the nut and waterproof rubber ring.
3. Insert the conductor into the metal terminal and crimp securely.
4. Insert the assembly into the inverter port and tighten until an audible click confirms locking.

LIB RHR01L1P05~12-AU

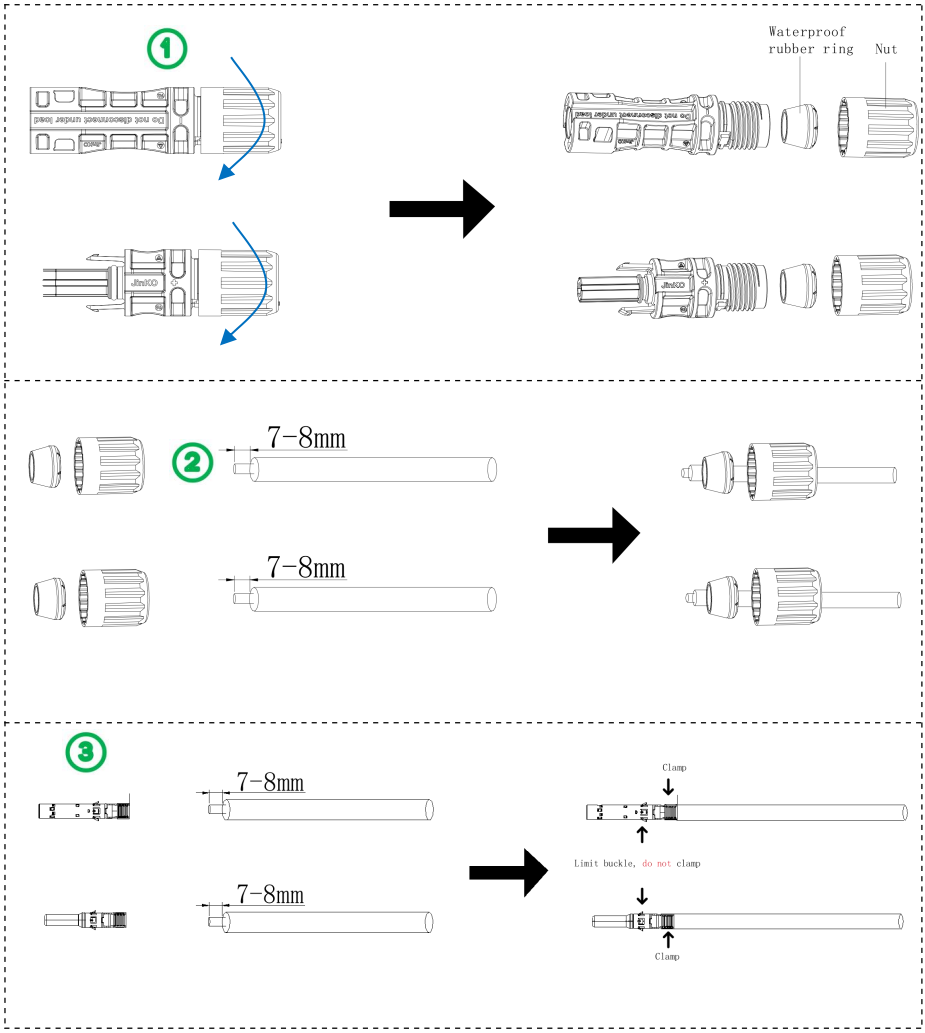

LIB RHR01L1P05~12-AU

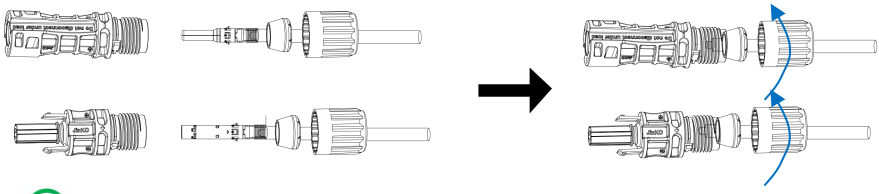

4

After hearing a click sound, gently pull
the cable to check whether it is fastened

Remove Terminal: After clamping, pull out the terminal

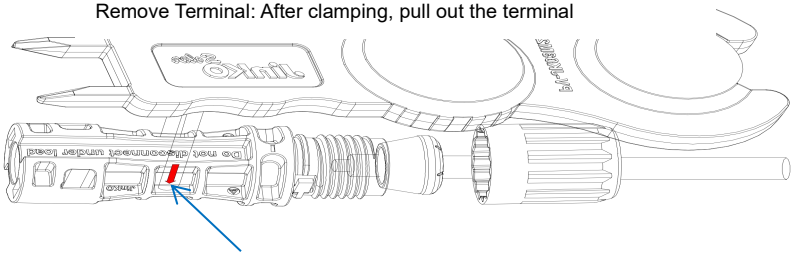

6.5 Battery Connection

Danger

Battery cable connection:

- **Battery Short Circuit Risk:** A short circuit can release immense energy, causing fire or explosion.
- **Power Off:** Verify the inverter and battery are powered off before connecting cables.
- **No Hot-Swapping:** Never connect or disconnect battery cables while the inverter is operating.

Warning

Pre-Connection Checks:

- Verify battery polarity and ensure open-circuit voltage is within the allowable range
- Ensure an external DC circuit breaker (rated ≥ 150A) is installed on the battery side.

Figure 6.4 Connecting Battery cables

Connection Procedure:

1. **Correct Polarity is Critical:** Connect BAT+ to BAT+ and BAT- to BAT-.
2. **Secure Connection:** Fully insert the cable core into the terminal and tighten firmly.The torque for the cover screw is 5 N.m
3. **Verification:** Gently pull the cable to confirm it is securely fastened.
4. **Protective Shield：** After connecting the cables, secure the port protective cover onto the battery terminal by snapping it into place. The cover features snap tabs on both sides and a locking screw at the top, with a torque requirement of 0.65 N.m
5. **Dismantling Method:** First remove the locking screw, then press down on the two side buckles to remove it

LIB RHR01L1P05~12-AU

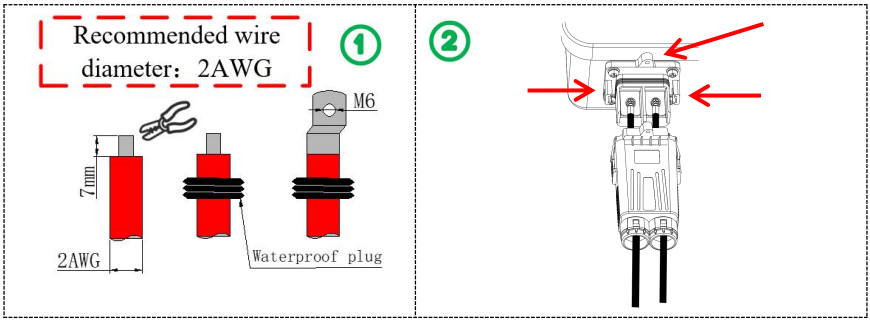

6.6 AC Load/Grid/Generator Cable Connection

⚠ Warning

- **Secure Connection:** Ensure cables are fully inserted and terminals are firmly tightened to prevent overheating and damage.
- **Insulation Check:** Ensure the insulation board at the AC terminal is tightly fastened.
- **Overheating Risk:** Loose connections may cause overheating and device damage

Figure 6.5 Connecting AC load/grid/Diesel generator cables.

General Procedure for AC Connections:

1. Strip insulation to recommended length.
2. Insert Conductors into Terminals and Tighten Securely to Specified Torque
3. Fasten the Insulation Board Tightly and Verify Cable Glands Are Properly Tightened and Weatherproof
4. Align the gap, insert the cable terminal into the board terminal, and listen for a click sound to confirm the connection is complete

Connection Confirmation Indicator

- When inserting the AC cable into the terminal, an audible "click" sound will be heard, indicating that the connector is fully locked and secure.
- Visually verify that the cable gland is properly tightened and the insulation board is flush with the port. Do not proceed if no click sound is detected.
- This physical feedback ensures reliable contact and prevents loose connections.

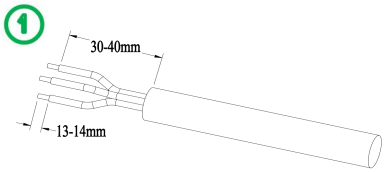

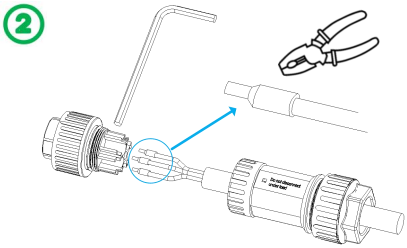

The torque for the AC terminal screw. is 0.6N.m

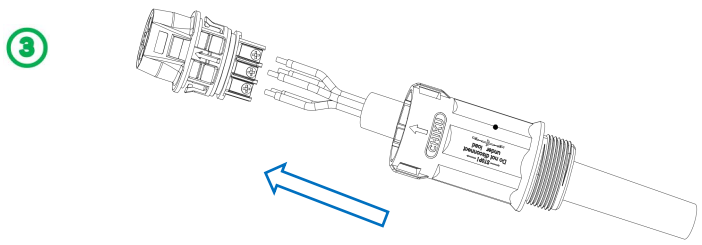

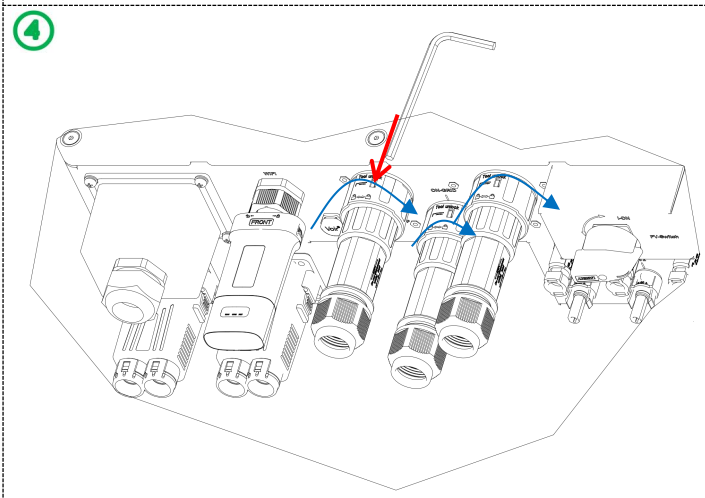

means for disconnecting AC terminal： Press the buckle at the notch with a tool and apply outward force to remove the cable terminal

6.7 Installation of Communication Dongle

The communication collector is an external part that you need to select by yourself.

The communication dongle (optional) enables remote monitoring and control via Wi-Fi/Bluetooth.

Figure 6.5 Communication interface and installation and disassembly diagram

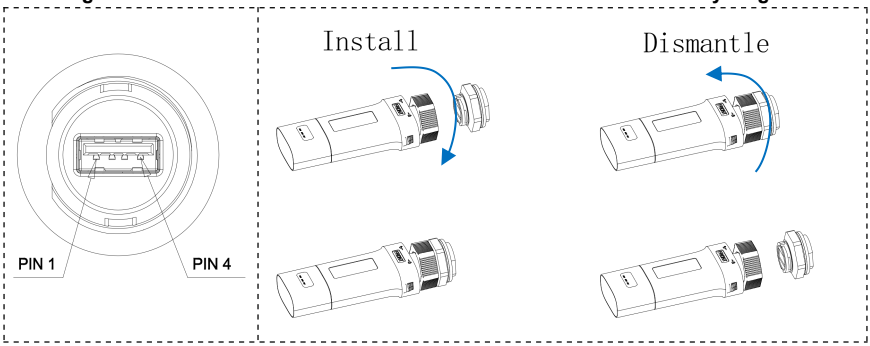

LED Indicator Meanings: (Refer to Tables 6-2 and 6-3 in original document for detailed indicator descriptions)

Table 6-2 Indicators on the AGN8 WIFI Dongle

LED	state	Specific meanings
RUN&COM&NET	Alternating flashing (cycle 1500ms, each light flash for 500ms in sequence)	Self-test mode
	Flashing together (cycle 1 second, off 900ms, on 100ms)	Dongle is currently upgrading (including Bluetooth App upgrade)
	Illuminate together for 5 seconds	Dongle upgrade failed
RUN	Slow flashing (on for 1 second and off for 1 second)	Dongle is running normally
	Light off	Dongle running abnormally
	Twice flashing (on (off) 100ms, off (on) 100ms, twice)	Dongle sends Bluetooth data to the app
COM	Flash (on for 200ms, off for 200ms)	Dongle time not synchronized (scanning will not start)
	Light off	Abnormal southbound

		communication
	Flashing once (on (off) 100ms, off (on) 100ms, once)	Normal southbound communication
NET	Flash	Connecting to Wi-Fi
	Light off	Connecting to MQTT
	Slow flashing	Connecting to platform
	Always on	Successfully connected to the platform
	Twice flashing	Dongle sends platform data

Table 6-3 Meaning of AGN9 4G Dongle indicator light.

LED	state	Specific meanings
RUN&COM&NET	/	/
RUN	Always on	The process from power on to initialization
	Flash (with an interval of 100ms)	Gateway initialization completed, flashing for 5 seconds
	Twice flashing (on (off) 100ms, off (on) 100ms, twice)	Slow flashing (with an interval of 1 second)
COM	/	/
NET	Always on	Looking for the internet or on a call
	Flash (interval 200ms)	Data connection set up or network registered
	Slow flashing (with an interval of 800ms)	2G/3G network registered
	Light off	Shutdown or module sleep

6.8 Communication Port Connections

The multifunctional communication port allows connections to meters, BMS, DRMS, and parallel systems.

General Connection Steps:

Step 1: Route communication cables through the waterproof gland and plug

Step 2: Connect the cables to the corresponding port on the device.

Step 3: Fasten the waterproof cover with screws and tighten the nut.

Figure 6.6 Interface diagram

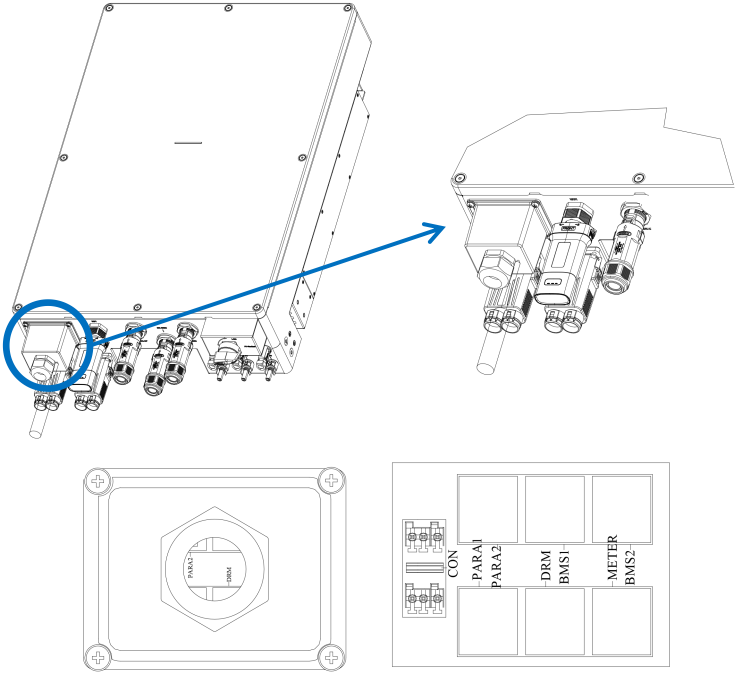

Communication cover screw torque: 1.6 N • m

LIB RHR01L1P05~12-AU

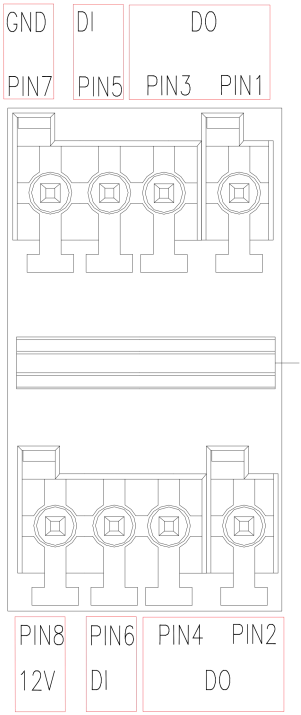

Table 6-4 Port description

PIN	Definition
CON	Heat pump/Generator DO interface
METER	Electric meter communication
BMS1/BMS2	Battery Management System communication (CAN/RS485)
DRM	DRMS function
PARA1/PARA2	Parallel communication interface

Figure 6.7 Sequence of RJ45 crystal terminals

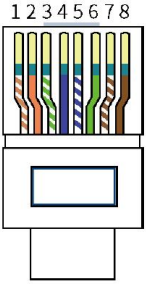

Table 6-5 RJ45 cable sequence colors

1	2	3	4	5	6	7	8
Orange &White	Orange	Green& White	Blue	Blue & White	Green	Brown& White	Brown

6.8.1 Smart Meter Connection

- Connect meter L/N terminals to grid supply
- Install Current Transformer (CT) on grid L line with arrow pointing toward grid
- Use provided communication cable with correct pinout (Pin 7: RS485-B, Pin 8: RS485-A)

Figure 6.8 Smart meter terminal wiring diagram

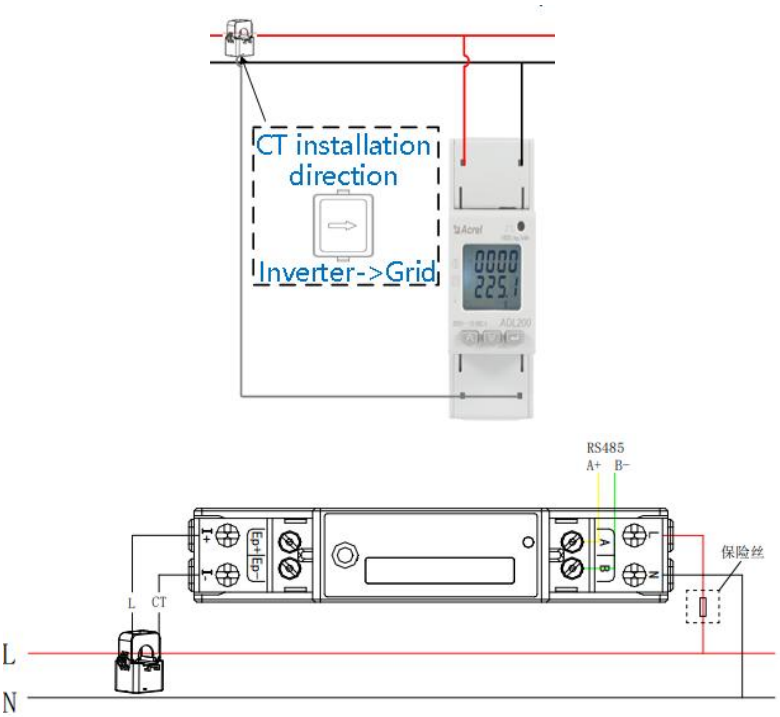

The grooves of the current transformer have arrows for current flow, as shown in Figure 6.8. The tip of the arrows points to the power grid.

Figure 6.9. Direction of current transformer cable

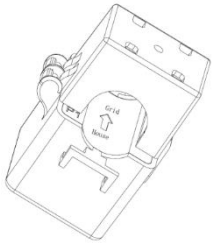

According to Table 6-6, connect ports 8 and 7 of the RJ45 cable terminals on the METER corresponding to RS485-A and RS485-B on the meter.

Table 6-6 Smart meter interface description

PIN	Color	Definition	Function	Note
1-6	/	/	/	/
7	Brown& White	RS485_B-EEM	RS485 differential signal B	Smart meter 485 communication
8	Brown	RS485_A-EEM	RS485 differential signal A	

6.8.2 BMS Communication Connection

Table 6-7 Description of BMS1 ports

PIN	Color	Definition	Function	Note
1	Orange & White	RS485-A1-BMS	RS485 differential signal A1	BMS1 CAN port &EMS RS485 multiplex port
2	Orange	RS485-B1-BMS	RS485 differential signal B1	
3	/	/	/	
4	Blue	CANA-H1-BMS	CAN high level data	
5	Blue & White	CANA-L1-BMS	CAN low level data	
6-8	/	/	/	/

Table 6-8 Description of BMS2 ports

PIN	Color	Definition	Function	Note
1	Orange & White	RS485-A2-BMS	RS485 differential signal A2	BMS2 CAN port &EMS RS485 multiplex port
2	Orange	RS485-B2-BMS	RS485 differential	

			signal B2	
3	/	/	/	
4	Blue	CANA-H2-BMS	CAN high level data	
5	Blue & White	CANA-L2-BMS	CAN low level data	
6-8	/	/	/	/

Note: Communication with lithium batteries requires attention to the battery's communication port sequence and pin definition.

6.8.3 DRMS/DI Connection

Table 6-9 Description of DRM ports

PIN	Color	Definition	Function	Note
1	Orange &White	DRM1/5	The DRMS interface is applicable to the Australian AS-NZS-4777.2 (some European requirements) safety standard	DRMs function
2	Orange	DRM2/6		
3	Green& White	DRM3/7		
4	Blue	DRM4/8		
5	Blue & White	REF GEN		
6	Green	COM LOAD		
7	Brown& White	/	/	/
8	Brown	/	/	/

Table 6-10 Description of dry contact ports

	PIN	Definition	Note
DO 1	2	OP1_NO	External dry contact port
	4	OP1_COM	
DO 2	1	OP2_NO	
	3	OP2_COM	
/	5-6	/	/

6.8.4 Parallel System Configuration

If multiple inverters are used, connect the terminal of the network cable to Pa1 of the first inverter, connect the other end to Pa2 of the second inverter, and so on. Table 6-11 describes the signal of the network cable. Figure 6.10 shows the sequence of the network cable connection.

Table 6-11 Description of parallel ports

PIN	Color	PARA 1	PARA 2	Note
1	Orange＆White	CON1_AO	CON2_AO	Parallel signal
2	Orange	CON1_BO	CON2_BO	
3	Green&White	CON1_AI	CON2_AI	
4	Blue	CON1_BI	CON2_BI	
5-6	/	/	/	/
7	Brown&White	CON_SyncH	CON_SyncH	Simultaneous signal
8	Brown	CON_SyncL	CON_SyncL	

Figure 6.10 Parallel communication line sequence diagram

LIB RHR01L1P05~12-AU

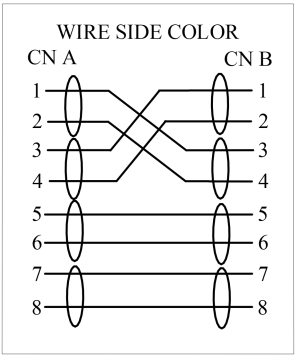

Application note:

- Supports a maximum of six single-phase hybrid inverters in parallel.
- Ensure that the inverters are connected to parallel lines.
- Ensure that the load power is less than the maximum parallel power.
- The length of the cable connecting the load end of the inverter to the BACK UP end of each device must be the same to ensure loop impedance;

Parallel standard wiring is shown in the following figure, detailed operation sees parallel system operation manual.

LIB RHR01L1P05~12-AU

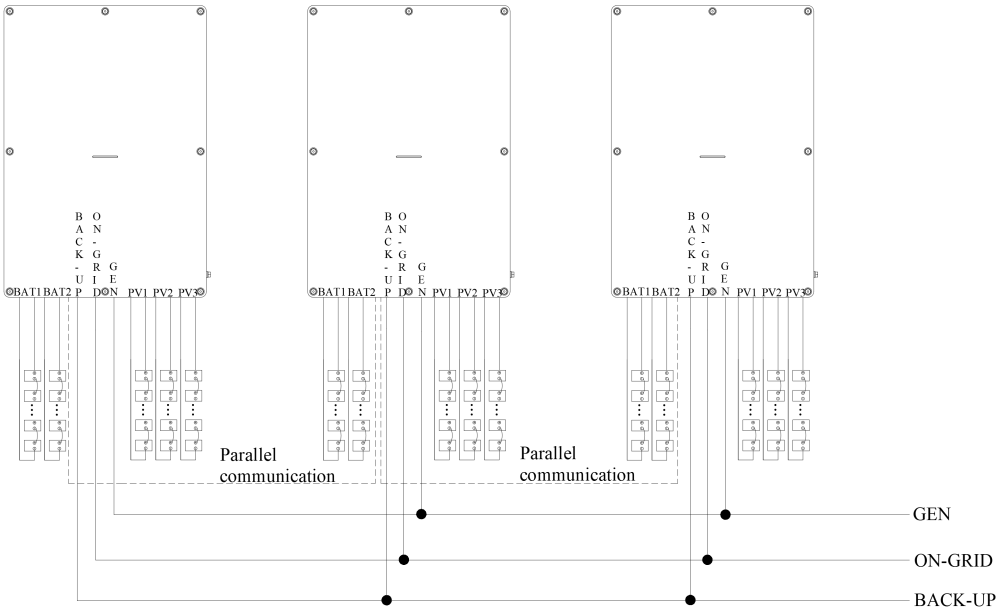

7 Inverter Operation

This chapter provides comprehensive instructions for operating your LIB D5~12K-SL-AU hybrid inverter system. It covers pre-operation checks, startup/shutdown procedures, working mode configurations, and status indicator interpretations. Always follow these guidelines to ensure safe and efficient system operation.

7.1 Pre-power-on Inspection

Table 7-1: Pre-Operation Checklist

Serial	Inspection Item	Check the entry
1	Mounting Security	Inverter securely mounted to wall bracket
2	Cable Management	All cables properly routed, bundled, and undamaged
3	DC Connections	PV/Battery cables connected with correct polarity; voltages within specified range
4	DC Switch State	DC switch(The inverter-integrated PV switch or external circuit breaker for connecting the battery, or the switch built into the battery) properly installed in OFF position
5	Grid Connection	AC circuit breaker between inverter and grid properly installed and DISCONNECTED
6	Load Connection	AC circuit breaker between inverter and load properly installed and DISCONNECTED
7	BMS Communication (if applicable)	Lithium battery communication cables properly connected (if applicable)
8	Generator Connection	AC circuit breaker between inverter and generator properly installed and DISCONNECTED (if applicable)

7.2 Startup Procedure

Follow these steps in sequence to safely power on the inverter：

Startup Steps:

1. **Confirm State:** Ensure the inverter is in a complete shutdown state (no LEDs illuminated).

2. **Enable Grid Connection:** Close the AC circuit breaker connecting the inverter's **ON-GRID** port to the public grid.
3. **Enable PV Input (if applicable):** Turn the **PV DC switch** on the inverter to the **ON** position.
4. **Enable Battery:** Power on the battery system and close the **DC switch** between the battery and the inverter.
5. **Inverter Startup:** The inverter will perform an automatic self-test. Upon success, it will begin normal operation.
6. **Enable Backup Load:** Close the AC circuit breaker connecting the inverter's **BACK-UP** port to the backup loads.

7.3 Shutdown Procedure

Follow these steps in sequence to safely power off the inverter.

Shutdown Steps:

1. **Disconnect Grid:** Open the AC circuit breaker between the inverter's **ON-GRID** port and the public grid.
2. **Disable PV Input:** Turn the **PV DC switch** on the inverter to the **OFF** position.
3. **Disable Battery:** Power off the battery and open the **DC switch** between the battery and the inverter.
4. **Disconnect Loads:** Open the AC circuit breaker between the inverter's **BACK-UP** port and the backup loads.

7.4 Working Mode

The inverter supports multiple operating modes to optimize energy usage based on your needs. Configure these via the monitoring App.

7.4.1 Self-use Mode (default mode)

Mode Function: Maximizes self-consumption of solar energy, minimizing grid usage

Energy Priority: Solar → Battery → Grid

Usage scenarios: Indoor and outdoor unconditioned

(The indoor environment needs to ensure air circulation, with no corrosive gases, conductive dust, or oil mist in the air. The intake and exhaust channels should be kept unobstructed, and the ambient temperature should meet the rated working conditions of the equipment.)

Temperature sensor (Battery Inverters-Lead Acid Batteries):

The product does not support remote battery temperature monitoring.

An inverter with storage connections will need to provide a means for temperature compensation of the battery charge voltages.This is particularly important for use with lead acid batteries in warm climates, to avoid damage to battery banks by overcharging in hot weather, and related hazards due to release of hydrogen gas and cell rupture.Most stand-alone inverters control this function via a remote temperature sensor which is attached to the battery bank. The LIB RHR01L1P05~12-AU does not include a connection terminal for a remote battery temperature sensor. If installing LIB RHR01L1P05~12-AU with lead acid batteries please check with EnergyLIB (Suzhou) New Energy Technology Co., Ltd.for advice regarding charge settings.

Operational Behavior:

- *Sufficient Solar:* Powers loads → charges battery → exports to grid
- *Insufficient Solar:* Solar + battery power loads
- *Low Solar/Battery:* Solar + battery + grid power loads
- *No Solar:* Battery powers loads (if sufficient)
- *Grid Outage:* Solar + battery power loads independently.

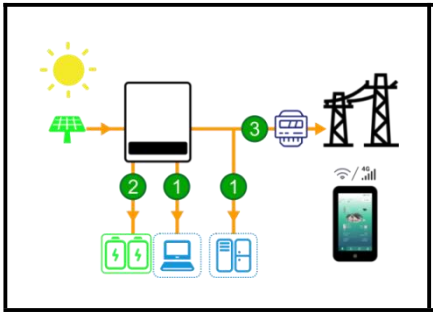

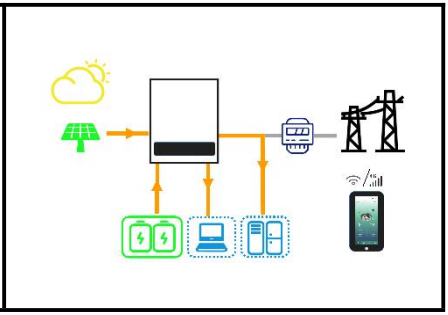

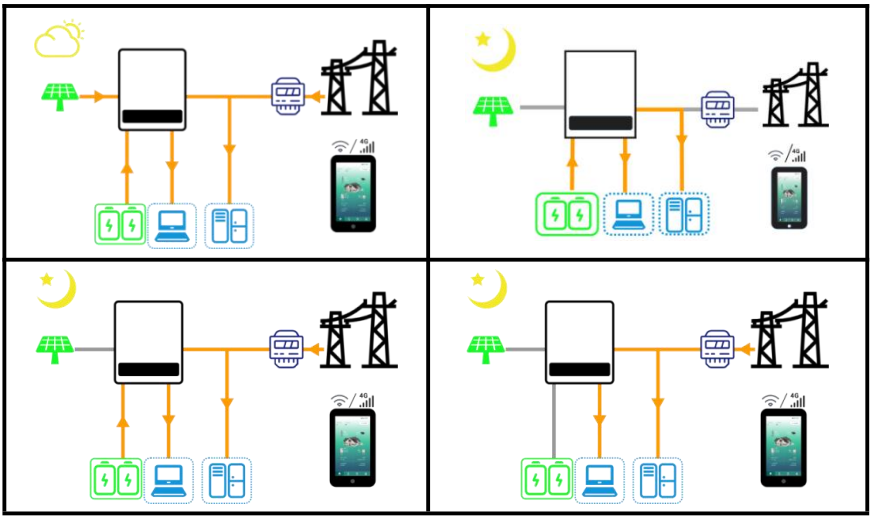

7.4.2 Timed Charge/Discharge Mode

Mode Function: Scheduled battery operations based on time-of-use rates

Charge Period (Typically Night):

- Solar → battery charging → load powering
- Grid → battery charging → load powering.

Discharge Period (Typically Day):

- Solar → load powering
- Solar + battery → load powering
- Battery → load powering (if no solar)

Note: Charging/Discharging power and periods are user-defined via the App.

Charging period:

LIB RHR01L1P05~12-AU

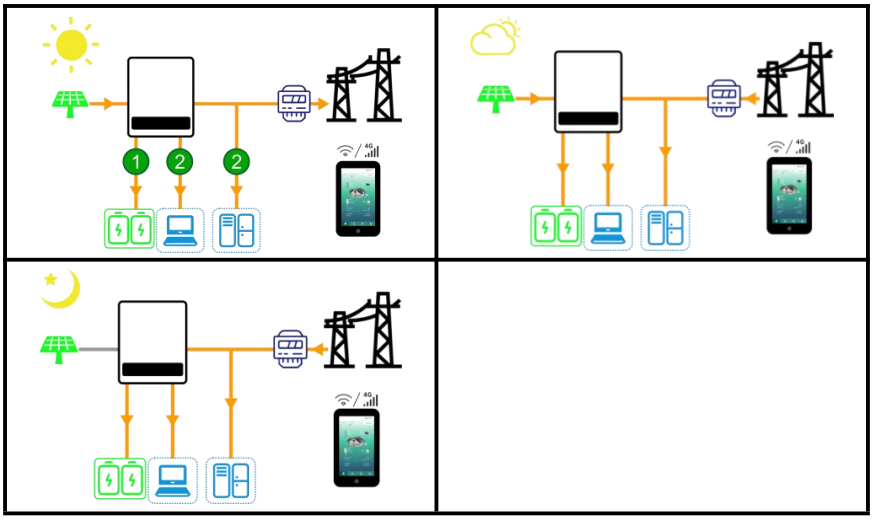

Discharge period:

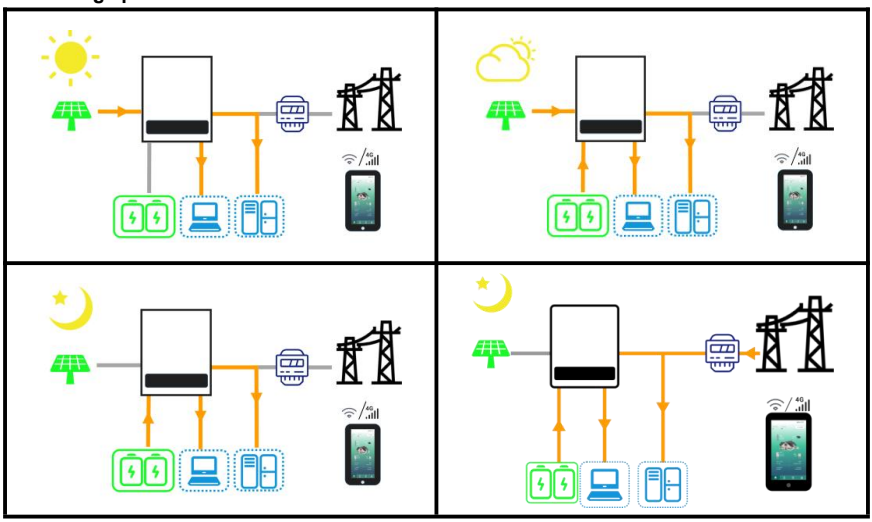

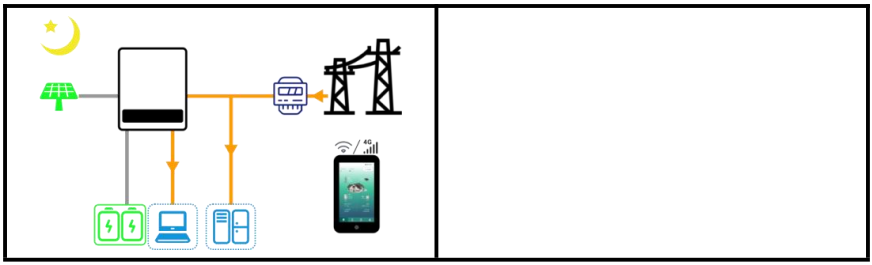

7.4.3 Backup Mode/Disaster Recovery Mode

Mode Function: Maintains battery at full charge for emergency backup during grid outages

Energy Priority: Grid/Solar → Battery → Loads → Grid

Operational Behavior:

- *Grid Available:* Priority battery charging → then load powering
- *Grid Outage:* Solar + battery power backup loads

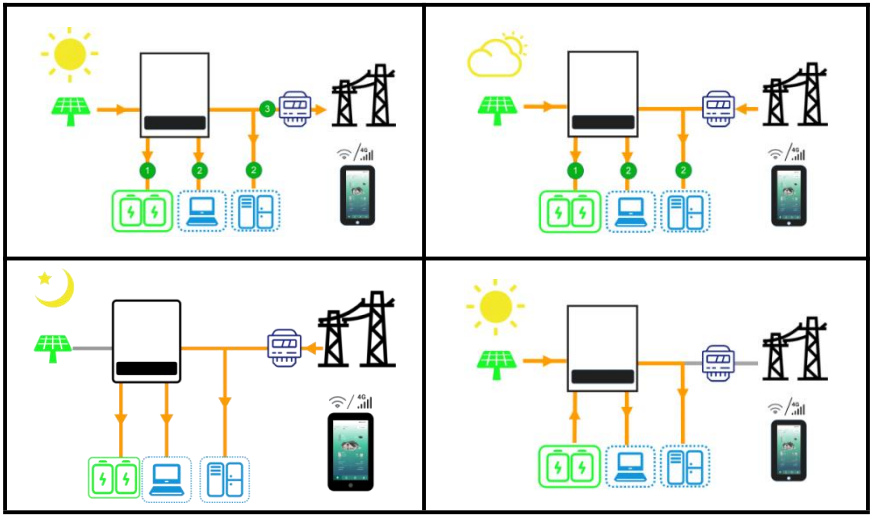

7.4.4 Priority Feed to Grid Mode

Mode Function: Maximizes solar energy export to grid for feed-in tariff revenue

Energy Priority: Loads → Grid → Battery

Operational Behavior:

- *Excess Solar:* Powers loads → exports to grid → charges battery
- *Other Conditions:* Operates in Self-Use mode

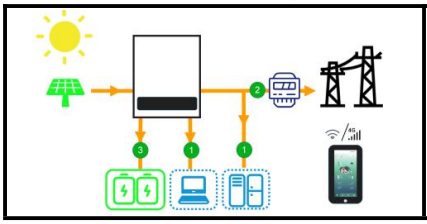

7.5 Operation Status and Indicators

7.5.1 Inverter Operation Mode Description

Table 7-1 Inverter operating modes

Series No.	Mode	Description
1	Standby	Initial state after power is applied. Waits for conditions to be met to begin self-check.
2	Self-check mode	Performs internal diagnostics and initialization.
3	On-grid mode	Normal operation, connected to and exchanging power with the grid.
4	Off-grid mode	Powers the load independently when the grid is unavailable.
5	Fault mode	Operation halted due to a detected error. Requires intervention.

7.5.2 LED Indicator Description

The multi-color LED bar on the panel provides clear status information at once.

Table 7-2 Indicator status description

LED Color	Status Pattern	System Status	Description & User Action

Green	Solid On	On-Grid	Normal operation, exchanging power with the grid.
	Slow Flash (1s interval)	Ready	Powering on, please wait before connecting loads.
	Fast Flash (0.1s interval)	Initializing/ Updating	System booting or firmware updating. Wait for completion.
Blue	Solid On	Off grid	Powering loads independently (grid is offline).
Red	Solid On	Critical Fault	Serious error. System stopped. Requires inspection.

8 App Introduction & Configuration

This chapter provides detailed instructions for using the ESS LINK monitoring application for remote management, configuration, and control of your LIB hybrid inverter. Connection to the inverter is established via an optional Wi-Fi or 4G communication dongle.

8.1 APP Download

To use the remote monitoring features, you must first install the ESS LINK application on your mobile device.

Download Instructions:

Android Users: Scan the QR code below to download the APK file, or find it in your device's app store.

iOS Users: Scan the QR code below, or search for "ESS LINK" in the Apple App Store to download and install the app.

Note: For comprehensive instructions on app operation, please contact the manufacturer or refer to the dedicated ESS LINK operation manual.

Android apk

Google play

iOS

8.2 App Interface and Access Levels

The ESS LINK app provides various levels of access to ensure safe and stable operation.

Basic User Interface: Designed for end-users, this interface provides essential functions such as viewing real-time power generation, battery status, and system alerts. Inverter parameters are pre-configured for optimal performance.

Advanced Debugging Interface (Parameter Settings > Advanced): Access to this interface is restricted to certified installers and technicians. It allows modification of critical system parameters. Warning: Unauthorized changes by end-users can lead to equipment malfunction and may void the warranty.

8.3 Inverter Commissioning via App

Proper commissioning is critical for compliance with Australian grid standards. Follow these steps to configure the inverter correctly.

8.3.1 Country Grid Code/Region settings

Navigation Path: Admin -> Advanced Settings -> Master Setting -> Certification -> Grid Certification

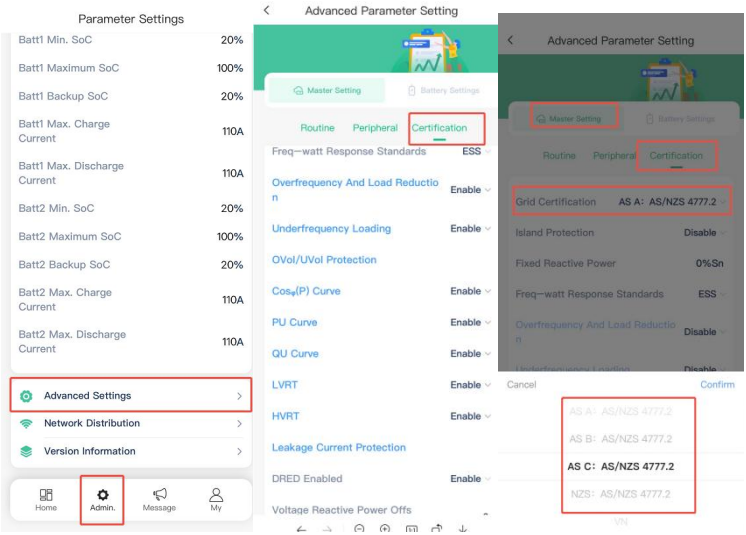

Configuration Steps:

1、Select Australian grid profile (Region A, B, C or NZS)

2、Verify automatically loaded protection parameters

Note: Settings comply with AS/NZS 4777.2 standards.

8.3.2 Power Quality Response Modes Settings

Navigation Path: Admin -> Advanced Settings -> Master Setting -> Certification -> Grid Certification -> PU Curve/QU Curve

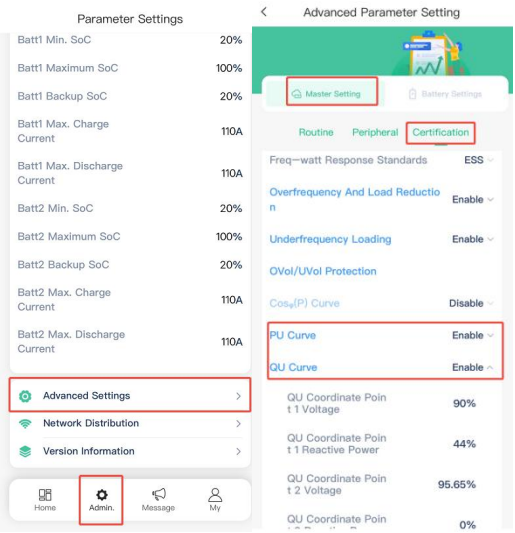

Displays and allows adjustment of power quality response modes including PU/QU curves. Pre-configured based on selected grid certification.

8.3.3 Grid Protection Settings

Navigation Path: Admin -> Advanced Settings -> Master Setting -> Certification -> Grid Certification -> OVol/UVol Protection / Overfrequency And Load Reduction / Underfrequency Loading

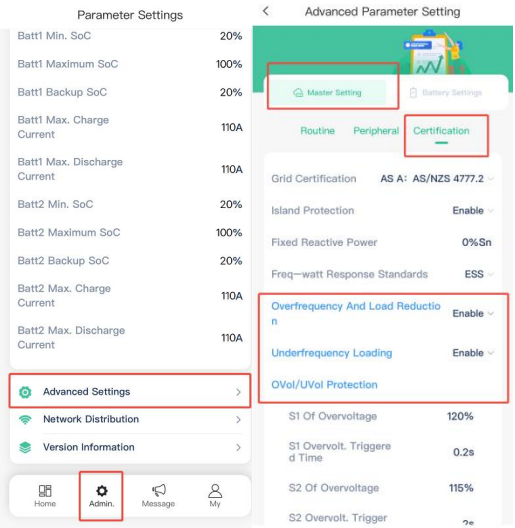

View and adjust grid protection settings including over/under voltage and frequency protection. Automatically set based on grid certification selection.

8.3.4 Inverter Firmware Version

Navigation Path: Admin -> Version information

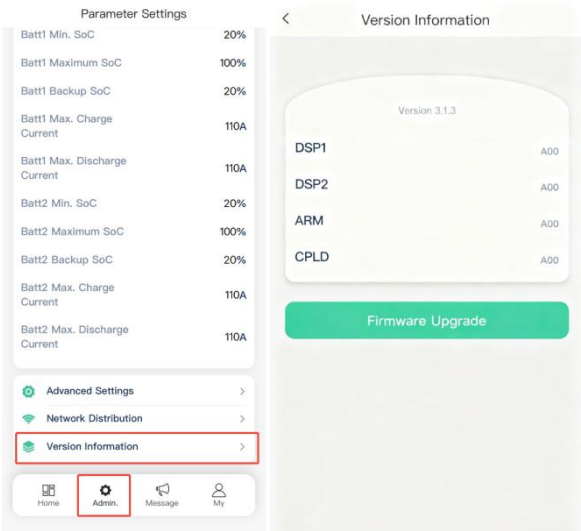

Displays current inverter firmware version. Informational only - updates require qualified technicians.

8.4 Generation Limit and Export Limit Control settings

This function allows for the management of power fed to the grid, as required by AS/NZS 4777.2 Clause 6.

Prerequisite: Compatible energy meter (ADL200N-CT, etc.) properly installed and configured.

Navigation Path:

Soft limits: Admin -> Advanced Settings -> Master Setting -> Routine -> Anti Backflow Period

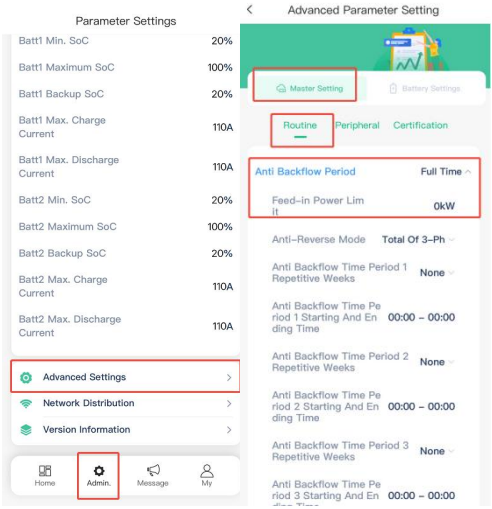

Hard limits: Admin -> Advanced Settings ->Master Setting -> Certification -> Hard Limit Anti-Reverse

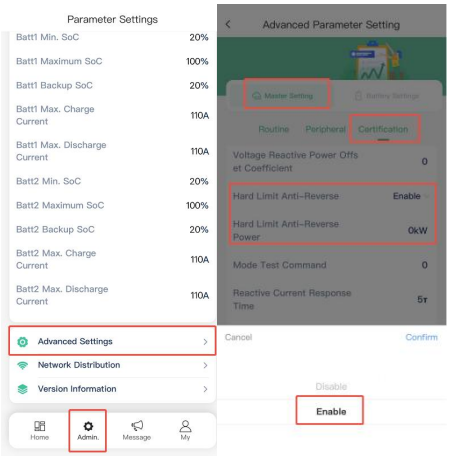

Meter: Admin -> Advanced Settings ->Master Setting -> Meter

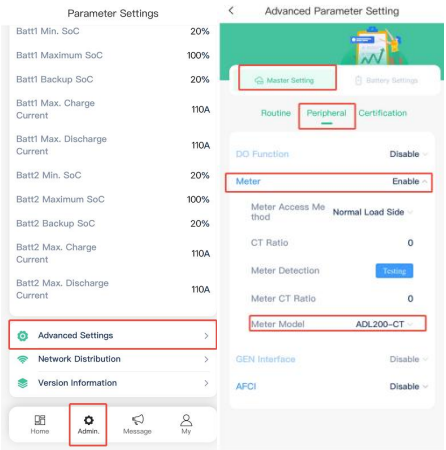

Configuration:

1. **Enable Function:** Locate the "**Feed-in Power Limit**" (for soft limits) or "**Hard Limit Anti-Reverse**" setting and enable it.
2. **Set Limits:** Define the desired export power limit (in kW). Soft limits curtail output based on time schedules, while hard limits set the maximum allowable inverter output power.

   A diagram for meter installation and connection is provided below for reference.

Meter installation diagram (Model:, ADL200N-CT)

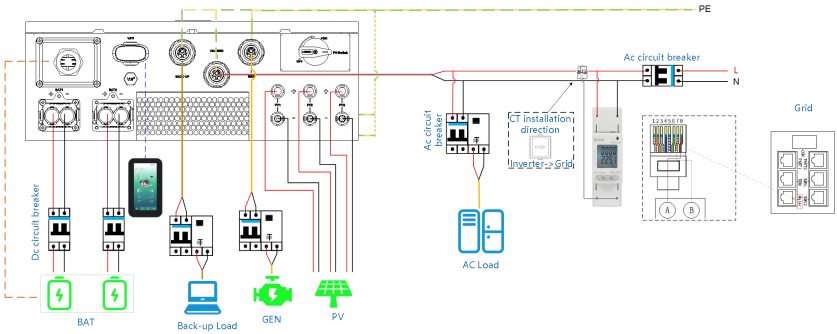

Meter installation diagram (Model: ADL200N-CT/D16-2)

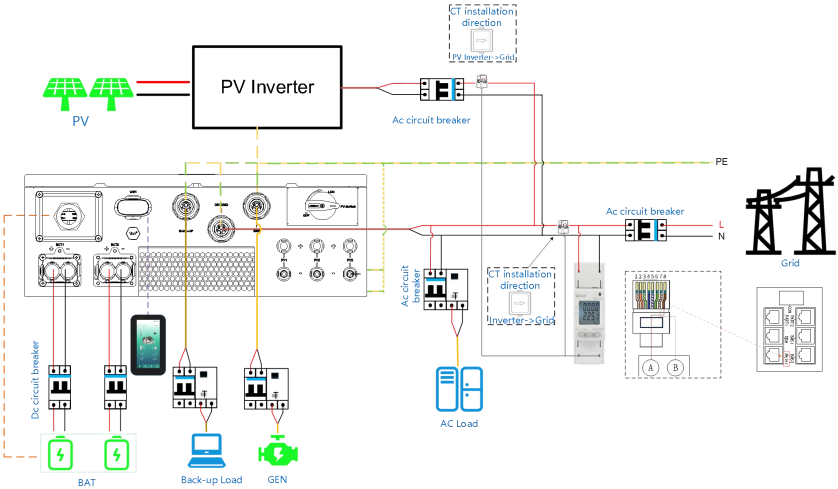

8.5 Anti-islanding

Enabled by default with pre-configured settings complying with AS/NZS 4777.2.

Navigation Path: Admin -> Advanced Settings -> Master Setting -> Certification -> Island Protection

Note: No user configuration required or recommended.

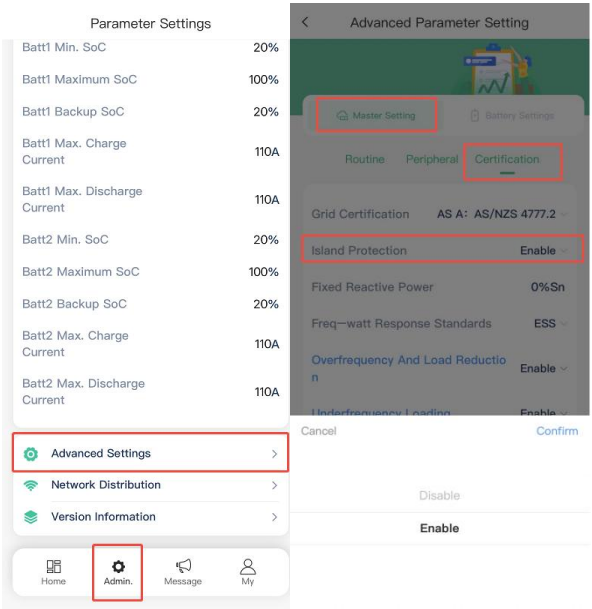
Parameter Settings
Batt1 Min. SoC 20%
Batt1 Maximum SoC 100%
Batt1 Backup SoC 20%
Batt1 Max. Charge Current 110A
Batt1 Max. Discharge Current 110A
Batt2 Min. SoC 20%
Batt2 Maximum SoC 100%
Batt2 Backup SoC 20%
Batt2 Max. Charge Current 110A
Batt2 Max. Discharge Current 110A
Advanced Settings
Network Distribution
Version Information
Home
Admin.
Message
My
Advanced Parameter Setting
Master Setting
Battery Settings
Routine
Peripheral
Certification
Grid Certification AS A: AS/NZS 4777.2
Island Protection Enable
Fixed Reactive Power 0%Sn
Freq—watt Response Standards ESS
Overfrequency And Load Reductio n Enable
Cancel
Confirm
Disable
Enable

8.6 Insulation Fault

Continuously active ground fault monitoring insulation resistance threshold per AS/NZS 5033. Preset and non-modifiable.

Navigation Path: Message

Alarm Indication:

- **Visual Indicator:** Steady red LED on inverter housing
- **App Notification:** Push notification via ESS LINK App

Reset Procedure:

1、 Identify and resolve the cause of the insulation fault (e.g., check for damaged PV cables).

2、 Once the insulation resistance recovers to a value above 33 kΩ, the alarm condition can be manually cleared. This can be done via the ESS LINK App under the Alarm History or Fault Status menu.

3、 The system can then be restarted. The fault history remains accessible in the App for review.

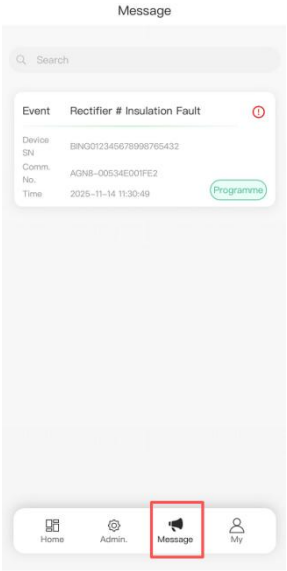

9. Troubleshooting and Maintenance

This chapter provides guidance for diagnosing and resolving common system issues. Follow the instructions carefully. For faults not listed here, or if problems persist after troubleshooting, contact your dealer or after-sales service center.

9.1 Alarm Diagnosis and Processing

Table 9-1 Alarm list and troubleshooting measures.

Sequence number	Fault name	Note	Solutions
PV			
1	PV 1/2/3 is not connected	Remind	➢ **Cause:** PV string disconnected or DC breaker open. ➢ **Solution:** Check PV cable connections and ensure the inverter's PV DC breaker is closed.
2	PV 1/2/3 overvoltage	Fault	➢ **Cause:** PV string voltage exceeds inverter's maximum input voltage. ➢ **Solution:** Reduce the number of series-connected PV modules to lower the string voltage within the allowable range. The system will auto-recover after correction.
3	PV 1/2/3 overload time out	Alarm	➢ **Cause:** Inverter is in an overload state. ➢ **Solution:** Check the load. The alarm will automatically clear 10 minutes after the inverter returns to normal operation or after a fault reset command.
4	PV 1/2/3 reverse connection	Fault	➢ **Cause:** PV positive and negative

			terminals are reversed. ➢ **Solution:** Check and correct the PV polarity, then restart the inverter.
5	PV connection mode is incorrect	Alarm	➢ **Cause:** PV connection mode set in the APP does not match the actual hardware setup. ➢ **Solution:** Log into the APP and ensure the configured PV connection matches the physical setup.
6	PV1/2/3 power tube is faulty	Fault	➢ **Solution:**1. Disconnect all AC and DC breakers. 2. Wait at least 5 minutes. 3. Reclose the breakers. If the fault persists, contact technical support.
7	PV 1/2/3 soft start failure	Alarm	
Battery			
8	Battery 1/2 is not connected	Remind	➢ **Solution:** Check if the battery specifications match, connections are correct, and voltage is normal. The alarm clears automatically when the issue is resolved.
9	Battery 1/2 overvoltage	Remind	
10	Battery 1/2 undervoltage	Remind	
11	Battery 1/2 power is insufficient	Remind	➢ **Cause:** Battery State of Charge (SOC) is too high or too low. ➢ **Solution:** Discharge or charge the battery. The fault auto-clears when SOC returns to normal range.
12	Battery 1/2 do not charge	Alarm	
13	Do not discharge battery 1/2	Alarm	
14	Battery 1/2 discharge stops	Alarm	
15	Battery is 1/2 full	Remind	
16	Battery 1/2 reverse connection	Fault	➢ **Solution:** Immediately check and correct the battery cable polarity.

17	Temperature of the lead-acid battery is abnormal	Alarm	➢ **Solution:** 1. Use a thermal camera to check if battery temperature is too high; wait for it to cool.
18	Battery connection mode is incorrect	Alarm	➢ **Solution:** Log into the APP and ensure the configured battery connection mode matches the physical setup.
19	Battery 1/2 overload timeout	Alarm	➢ **Solution:** Check the maximum charge/discharge current settings in the APP's battery settings menu and reduce them if necessary.
20	Battery 1/2 power tube is faulty	Fault	➢ **Solution:** 1. Disconnect all AC and DC breakers. 2. Wait at least 5 minutes. 3. Reclose the breakers. If the fault persists, contact technical support.
21	Battery 1/2 soft startup fails. Procedure	Alarm	
Others			
22	Grid voltage anomaly	Alarm	➢ **Solution:** Occasional alarms may show temporary grid issues; the inverter will auto-sync when grid stabilizes. Frequent alarms require checking grid quality, AC breaker, and cable connections. If connections are correct but alarms persist, contact support to adjust protection settings.
23	Network frequency anomaly	Alarm	
24	Reverse connection of L and N	Alarm	➢ **Solution:** Check and correct the phase sequence of L and N lines from the grid

25	Heat sink is too high	Fault	➢ **Solution:** Ensure the inverter is installed away from direct sunlight. Restart after the heatsink cools below 60°C and a 5-minute wait. If the fault persists, contact support.
26	Ambient temperature is too high	Alarm	
27	The inverter is overheated.	Alarm	
28	Insulation fault	Fault	➢ **Solution:** Check PV string insulation resistance to ground. If resistance is < 33 KΩ, locate and fix the short circuit. Check inverter PGND connection. The impedance protection point can be reset in persistently humid conditions.
29	Leakage protection failure/ Fan failure/ DC Bus Undervoltage	Fault	➢ **Solution:** 1. Disconnect all AC and DC breakers. 2. Wait at least 5 minutes. 3. Reclose the breakers. If the fault persists,
30	Model Capacity Fault / DSP Parameter Error / Version Incompatibility / DSP-CPLD Communication Fault	Fault	➢ **Solution:** Contact your distributor or service center to check APP parameter settings or perform a software upgrade.
32	Islanding protection	Alarm	➢ **Solution:** Check for poor or unstable grid quality. Follow the general restart procedure. If the fault persists, contact support.
34	Parallel Communication Alarm / System Derated / Parallel Module Number Abnormal/Repeated/Parameter Conflict	Alarm	➢ **Solution:** (For parallel systems only) Check parallel communication cable sequencing and parameter settings in the APP.

35	Meter Reversed / Communication Abnormal	Alarm	➢ **Solution:** Check the meter wiring connections.

Faults not mentioned in the following table still exist after being powered on. Contact your dealer or after-sales service center.

9.2 Regular maintenance

Regular maintenance is crucial for long-term system reliability and safety. **Always adhere to the following safety precautions before performing any maintenance.**

⚠ Warning

- ➢ **Power Off:** Ensure the inverter is completely powered down and disconnected from all power sources (AC and DC) before performing any maintenance.
- ➢ **Use PPE:** Always wear proper Personal Protective Equipment (PPE). Contact your dealer or after-sales service center.
- ➢ **Qualified Personnel:** If you are not a qualified technician, **contact your dealer or service center** for maintenance.

Table 9-2 Maintenance Instructions

Maintenance content	Maintenance methods	Maintenance period	Authorized Personnel
System cleaning	Inspect the heatsink, air inlet, and outlet for obstructions and dust accumulation. Clean if necessary.	Every 6-12 Months	**Qualified Electrician**
DC Switch	Operate the DC switch ON and OFF 10 times continuously to ensure proper mechanical function and contact integrity.	Annually	**Qualified Electrician**
Electrical	Check all electrical	Every 6-12 Months	**Qualified**

connection	terminals for tightness. Inspect cables for damage, wear, or exposed copper.		**Electrician**

10. Technical Parameters

Table 10-1 Technical Parameters Description

Product model	LIB RHR01L1P05-AU	LIB RHR01L1P06-AU	LIB RHR01L1P08-AU
Battery parameter			
Number of battery input channels	2		
Battery type	Lithium battery/Lead-acid battery/Sodium-ion(optional)		
Maximum input voltage	60V		
Battery voltage range	30~60V		
Full load battery voltage range	30~60V	30~60V	32~60V
Maximum charge and discharge current	125A/125A		
Peak charge/discharge current&duration	130A/130A（60s）		
Nominal charge/discharge power	5kW	6kW	8kW
Communication Interface	RS485/CAN		
Overvoltage Category	II		
PV input parameters			

LIB RHR01L1P05~12-AU

Number of PV input channels	3		
Maximum input power	10000Wp (3333 Wp /3333Wp/3333Wp)	12000 Wp (4000Wp/4000Wp/4000Wp)	16000 Wp (5333Wp/5333Wp/5333Wp)
Maximum input voltage	800V		
MPPT voltage range	130~800V		
MPPT full load voltage range	130~800V	130~800V	130~800V
Starting voltage	140V		
Rated input voltage	600V		
Maximum input current per MPPT	20A/20A/20A		
Maximum short-circuit current per MPPT	24A/24A/24A		
MPPT quantity	3		
Maximum input strings per MPPT	3		
Backfeed current	0A		
Overvoltage Category	II		
AC output/input Data(On-Grid)			
Nominal output power	5kW	6kW	8kW

LIB RHR01L1P05~12-AU

Nominal output Apparent power	5kVA	6kVA	8kVA
Maximum output power	5.5kW	6.6kW	8.8kW
Maximum output Apparent Power	5.5kVA	6.6kVA	8.8kVA
Nominal grid input power	18kW	18kW	18kW
Nominal grid input Apparent power	18kVA	18kVA	18kVA
Maximum grid input power	18kVA	18kVA	18kVA
Nominal grid input current	82A	82A	82A
Maximum grid input current	82A	82A	82A
Maximum current output	25A	30A	40A
Nominal output current	22.7A/21.7A	27.3A/26.1A	36.4A/34.8A
Max. Output fault Current	153.75A/17.3ms		
Nominal voltage	L/N/PE, 220V/230V		
Grid voltage range	184~276V		
Rated grid frequency	50/60Hz		
Grid frequency range	45Hz~55Hz/55Hz~65Hz		
Power factor	-0.8~0.8		

LIB RHR01L1P05~12-AU

THdI(@ Nominal power)	<3%		
Overvoltage Category	III		
AC Output Data (Backup)			
Nominal output power	5kW	6kW	8kW
Nominal output Apparent power	5kVA	6kVA	8kVA
Maximum output apparent power	5.5kVA	6.6kVA	8.8kVA
Maximum output power	20kVA~10s		
Nominal output current	22.7A/21.7A	27.3A/26.1A	36.4A/34.8A
Max. Output fault Current	253.0A/1.016s		
Nominal output voltage	L/N/PE, 220V/230V		
Nominal output frequency	50/60Hz		
Thdu(@ linear load)	<3%		
On/off-grid switch-over time	<10ms		
Overvoltage Category	III		
Diesel generator interface			
Maximum input power	18kVA		
Maximum input current	82A		

LIB RHR01L1P05~12-AU

Nominal output voltage	L/N/PE, 220V/230V
Generator voltage range	185-276V（P2N）
Rated grid frequency	50/60Hz
Grid frequency range	45Hz~55Hz/55Hz~65Hz
Power factor	-0.8~0.8
Efficiency	
European efficiency	97.70%
Maximum efficiency	98.20%
Maximum battery charge/discharge efficiency	95%
Protection	
DC Switch	Available
Input reverse	Available
Output overvoltage, overcurrent, short circuit	Available
Anti-islanding	Available(Frequency disturbance)
Residual current detection	Available
Insulation resistance detection	Available
Overvoltage Category	DC:II ; AC:III

LIB RHR01L1P05~12-AU

Surge protection level	DC:II ; AC:III
Protective class	Class Ⅰ
Battery input reverse connection protection	Available
Routine parameters	
Weight	36kg
Noise	<45dB
Working altitude	<4000m
Derating Temperature	>40℃
Ambient Temperature	-25℃~60℃
Ambient Humidity	5%~95%
Topolpgy	Non-isolated
Cooling method	Air cooling
IP Degrees	IP65
Dimensions	465*665*165mm
Standby loss	<15W
Features	

LIB RHR01L1P05~12-AU

DC terminal	MC4
AC output terminal	3P connector
interface	RS485/CAN/DRED/DO/Parallel port
Human-computer interaction mode	H5/LED/APP/WIFI/4G/Bluetooth
Scalability in Parallel function	Support
Standard Warranty	5 years
Certification	
Safety regulations	IEC 62109-1, IEC 62109-2, EN 62109-1, EN 62109-2, IEC62477-1, AS 60947-3
EMC	EN61000-6-1，EN61000-6-2，EN61000-6-3，EN61000-6-4,EN62920
Grid	VDE-AR-N 4105, EN50549, AS4777.2:2020+Amd 1:2021, IEC 61727, IEC62116, NC RfG
States country of manufacture	
China	EnergyLIB (Suzhou) New Energy Technology Co., Ltd.

Product model	LIB RHR01L1P9.9-AU	LIB RHR01L1P10-AU	LIB RHR01L1P12-AU
Battery parameter			
Number of battery input channels	2		

LIB RHR01L1P05~12-AU

Battery type	Lithium battery/Lead-acid battery/Sodium-ion(optional)		
Maximum input voltage	60V		
Battery voltage range	30~60V		
Full load battery voltage range	40V~60V	40V~60V	48V~60V
Maximum charge and discharge current	125A/125A		
Peak charge/discharge current&duration	130A/130A（60s）		
Nominal charge/discharge power	9.9kW	10kW	12kW
Communication Interface	RS485/CAN		
Overvoltage Category	II		
PV input parameters			
Number of PV input channels	3		
Maximum input power	18000Wp (6000Wp /6000Wp/6000Wp)	18000Wp (6000Wp /6000Wp/6000Wp)	18000Wp (6000Wp /6000Wp/6000Wp)
Maximum input voltage	800V		
MPPT voltage range	130~800V		
MPPT full load voltage range	130~800V	130~800V	130~800V

LIB RHR01L1P05~12-AU

Starting voltage	140V		
Rated input voltage	600V		
Maximum input current per MPPT	20A/20A/20A		
Maximum short-circuit current per MPPT	24A/24A/24A		
MPPT quantity	3		
Maximum input strings per MPPT	3		
Backfeed current	0A		
Overvoltage Category	II		
AC output/input Data (On-Grid)			
Nominal output power	9.9kW	10kW	12kW
Nominal output Apparent power	9.9kVA	10kVA	12kVA
Maximum output power	10.9kW	11kW	13.2kW
Maximum output Apparent Power	10.9kVA	11kVA	13.2kVA
Nominal grid input power	18kW	18kW	18kW

LIB RHR01L1P05~12-AU

Nominal grid input Apparent power	18kVA	18kVA	18kVA
Maximum grid input Apparent Power	18kVA	18kVA	18kVA
Nominal grid input current	82A	82A	82A
Maximum grid input current	82A	82A	82A
Maximum current output	50A	50A	60A
Nominal output current	45A/43A	45.5A/43.5A	54.5A/52.2A
Max. Output fault Current	153.75A/17.3ms		
Nominal voltage	L/N/PE, 220V/230V		
Grid voltage range	184~276V		
Rated grid frequency	50/60Hz		
Grid frequency range	45Hz~55Hz/55Hz~65Hz		
Power factor	-0.8~0.8		
THdI(@ Nominal power)	<3%		
AC Output Data (Backup)			
Nominal output power	9.9kW	10kW	12kW
Nominal output Apparent power	9.9kVA	10kVA	12kVA

LIB RHR01L1P05~12-AU

Maximum output apparent power	10.9kVA	11kVA	13.2kVA
Maximum output power	20kVA~10s		
Nominal output current	45A/43A	45.5A/43.5A	54.5A/52.2A
Max. Output fault Current	253.0A/1.016s		
Nominal output voltage	L/N/PE, 220V/230V		
Nominal output frequency	50/60Hz		
Thdu(@ linear load)	<3%		
On/off-grid switch-over time	<10ms		
Overvoltage Category	II		
Diesel generator interface			
Maximum input power	18kVA		
Maximum input current	82A		
Nominal output voltage	L/N/PE, 220V/230V		
Generator voltage range	185-276V（P2N）		
Rated grid frequency	50/60Hz		
Grid frequency range	45Hz~55Hz/55Hz~65Hz		
Power factor	-0.8~0.8		
Efficiency			

LIB RHR01L1P05~12-AU

European efficiency	97.70%
Maximum efficiency	98.20%
Maximum battery charge/discharge efficiency	95%
Protection	
DC Switch	Available
Input reverse	Available
Output overvoltage, overcurrent, short circuit	Available
Anti-islanding	Available(Frequency disturbance)
Residual current detection	Available
Insulation resistance detection	Available
Overvoltage Category	DC:II ; AC:III
Surge protection level	DC:II ; AC:III
Protective class	Class Ⅰ
Battery input reverse connection protection	Available
Routine parameters	
Weight	36kg

LIB RHR01L1P05~12-AU

Noise	<45dB
Topology	Non-isolated
Working altitude	<4000m
Derating Temperature	>40℃
Ambient Temperature	-25℃~60℃
Ambient Humidity	5%~95%
Cooling method	Air cooling
IP Degrees	IP65
Dimensions	465*665*165mm
Standby loss	<15W
Features	
DC terminal	MC4
AC output terminal	3P connector
interface	RS485/CAN/DRED/DO/Parallel port
Human-computer interaction mode	H5/LED/APP/WIFI/4G/Bluetooth

LIB RHR01L1P05~12-AU

Scalability in Parallel function	Support
Standard Warranty	5 years
Certification	
Safety regulations	IEC 62109-1, IEC 62109-2, EN 62109-1, EN 62109-2, IEC62477-1, AS 60947-3
EMC	EN61000-6-1，EN61000-6-2，EN61000-6-3，EN61000-6-4,EN62920
Grid	VDE-AR-N 4105, EN50549, AS4777.2:2020+Amd 1:2021, IEC 61727, IEC62116, NC RfG
States country of manufacture	
China	EnergyLIB (Suzhou) New Energy Technology Co., Ltd.